H.A.R.S. Journal

Journal of the Hereford Amateur Radio Society

Issue No 14 • June 2018

Editorial

At the recent AGM two new committee members were elected. The committee welcomes AdrianHartland G8IVO, and Ben Elms-Lester 2E0KSX. Ben has taken over the finance aspect of the Society and is now the Hon. Treasurer. Many thanks go out to Rod who has held this position so effectively for many years. Thanks Rod.

Read about the entertaining technical evening we all had learning about transverters from member David G4ASR.

G4OGW (smiles from miles) presents some lovely pictures of The Marconi installations down in Cornwall.

What about opto-communication using 628nm red leds over distances of 100kM or more.

All this, and more, presented in this issue!

Ed

The New HARS Technical Library

This is the new lending library thanks to Bob G3IXZ, who is the "owner". The library is of course at Hill House - thanks to Geoff G8BNP. Great stuff here…, do take a look.

Subjects covered include: Antennas, Technical, Reference, Historical, Equipment and QRP.

This is really good Bob…thanks …Ed

NASA Deep Space Communications Network in Australia

This is the 70 metre dish at the NASA Deep Space Communications Network at Tidbinbilla which is near Canberra in Australia. Even though the Voyager spacecraft were launched in the 1970s, communication is still taking place from here. The Voyagers are now some tens of billion kilometres from Earth and well beyond our solar system. The received signal is so very weak, apparently one tenth of a billion-trillionth of a watt!! No doubt receiver cryogenics are used… super-conductors everywhere I should think.

Many thanks to my brother David …Ed

Photo of 70 metre dish and one of the smaller dishes in the background.

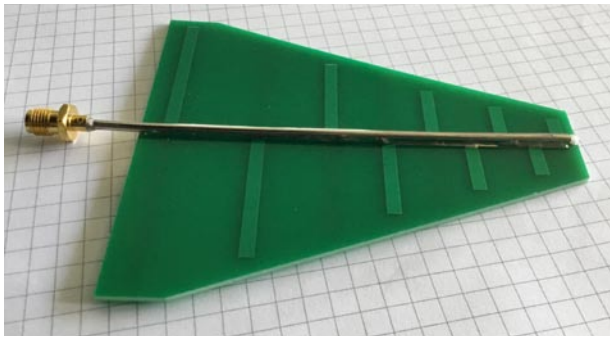

Antenna for 1.3GHz to 9.5GHz

There is much going on with microwaves at the moment so this little antenna might be of interest to a number of readers.

This is a printed circuit derived log-periodic antenna. It is beautifully made and is available on the net for about £14. Though advertised as having an N connector, it is in fact an SMA.

Gain	5dB
Power	15W max
Size	120x80x10mm

...Ed

Icom Ic9700

Last year the Ic9700 prototype was announced and shown by the Japanese company ICOM at a Ham-fest show in Japan. It attracted much attention from everyone who saw it.

Not much information is yet forthcoming because it has not yet been formally released. As much as is known, it is a shack bench-top rig for VHF/UHF together with 23cms. It is supposed that the VHF/UHF power output will be 100W but the 23cms (1.2GHz) will be 10W.

Having been developed as a Software Designed Radio, SDR, it transmits and receives in all modes plus D-Star. D-Star is a function which allows you to link up with a local repeater of your choice and talk with your contact via his local repeater of choice. This is achieved by using the Internet as the intermediary. The digital derived audio quality is known to be very high.

Before the rig makes it to the market place, it has to pass the CE test and the FCC test.

Watch this space!

This might suit me ...Ed

Training for a Radio Transmitting/Receiving Licence.

Our Society has been especially involved with the RSGB in the most useful matter of training would-be radio amateurs to successfully pass their examinations. These are organised by the RSGB and recognised by OFCOM and thus, a pass will qualify for a Licence to operate a transmitter. The bottom line for The Regulator, is that the students must know what they are doing when putting a radio station on the air.

For many months our Training Team led magnificently by David Porter (G4OYX), have regularly provided the expertise and encouragement to so many who have taken the decision to become a radio amateur enthusiast. Other regular members of the training team are Adrian G8IVO, Wendy 2E0WKQ, Bob G3IXZ, Ben 2E0EKX, Phil G4HQB, Geoff G8BPN, Richard G4FAD, Matt G8XYJ, Rod M0JLA and Nigel G4XTF.

The Licences

There are three levels of licence, these are Foundation, Intermediate and Advanced. None of these will require the ability to read Morse Code

- A **Foundation Licence** allows operation using 10W on all HF bands and VHF Bands. The limitation on VLF and Microwave bands is 1W.
- The **Intermediate Licence** allows operation using up to 50W on all bands except 430-432MHz where the maximum is 40W. Another exception is 1.850-2.00MHz where the level limit is 32W.
- An **Advance Licence** allows operation using 400W on all bands except 70-70.5MHz where the level is reduced to 160W

Training Location

Training takes place at Newton situated off the old Leominster/Hereford road. The picture shows the latest students who took the Foundation Level 13 with a 100% examination pass.

Foundation Licence 13, left to right: Angharad Owen, Robbie (25 out of 26!) Malcolm M6NXJ, Matthew Stone, Lachlan, Roger Brown M6RYR, Chris Mc Callion-Gow M6NZM, Colin Williams M6YRT, Brian Williams M6NXV

"Alexa, help me with ham radio"

By Dan Romanchik, KB6NU

I have had an Amazon Alexa for nearly a year now. Mostly, I just use it to listen to internet radio stations or tell me a joke, but I think it has more potential than that. For example, I've written before about how I'd like to develop an Alexa skill to control my IC-7300. I haven't gotten around to that yet, but, Joe, N3HEE, has just published an Alexa skill called Continuous Wave. It's designed to help you learn Morse Code.

To use this skill, you have to first enable it. Once enabled, say, "Alexa, open Continuous Wave." This opens the skill at the main menu. You can then say any of the following at any voice prompt…

- Learn
- Practice
- Alphabet
- Common words
- Random words
- Words
- Sentences
- Call signs
- Contest
- Quick Brown Fox
- QSO
- Help
- Stop – To end your session.

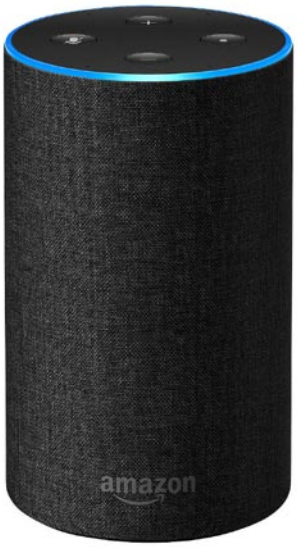

I've just played around with this app for a short time, but I've found it to be quite entertaining. It does, however, have one big drawback. You can't set the speed. It's currently limited to sending at 20 words per minute only.

Also, the learn function could use a little refining. When you give the command "learn," it asks you for a character, sends that character three times, and then asks you for another. If you could set the speed at which the skill sends characters, it could teach a character like the K7QO Code Course, first sending the character slowly, then ramping up the speed.

Overall, though, I think this is a great first shot at a usable Alexa skill for teaching Morse Code. I hope this is the first of many versions of this skill.

Other ham radio skills

While I was poking around on Amazon, I decided to see what other amateur radio skills might be available. Here are a few that I found:

Ham Exam. Ask Alexa to ask you questions from the Technician Class question pool.

Ham Lookup. Allows you to look up amateurs by call sign. Information is provided from the callbook.info database.

Ham Radio Propagation Forecast. Reports the latest forecasts directly from HamQSL (run by N0NBH).

ARRL Audio News. Adds ARRL Audio News to your Alexa flash briefing.

Building your own voice app

The Continuous Wave Alexa skill was developed using tools found at VoiceApps.Com. Two other websites—Pullstring and StoryLine—also have tools to help you build voice apps. And, Amazon has an online tutorial that will teach you how to build an Alexa app. I'm just getting started with these tools, so I can't recommend one over the others, but they do look like they'll make developing voice apps easier.

Since I'm currently in the process of updating my No Nonsense Technician Class License Study Guide, it occurs to me that I should also develop an Alexa skill for drilling students on test questions. I guess you could call them audio flashcards. Stay tuned for that.

Thanks, Dan …Ed

When he's not trying to figure out how to build voice apps, Dan blogs about amateur radio at KB6NU.Com, teaches ham radio classes, and operates CW on the HF bands. Look for him on 30m, 40m, and 80m. You can email him about the voice apps that you like at cwgeek@kb6nu.com.

Marconi's Radio Station 1901

by David G4OGW

Recently restored by the National Trust, the Marconi station looks as it did in January 1901, when Marconi received the distance record signals of 186 miles (299 km) from his transmitting station at Niton, Isle of Wight. The Lizard Wireless Station is the oldest Marconi station to survive in its original state in the world and is located to the west of the Lloyds Signal Station in what appears to be a wooden hut.

The two railway carriages originally used by the team have been converted into excellent holiday accommodation. Pat(XYL) hired one for a great weeks holiday a few years ago.

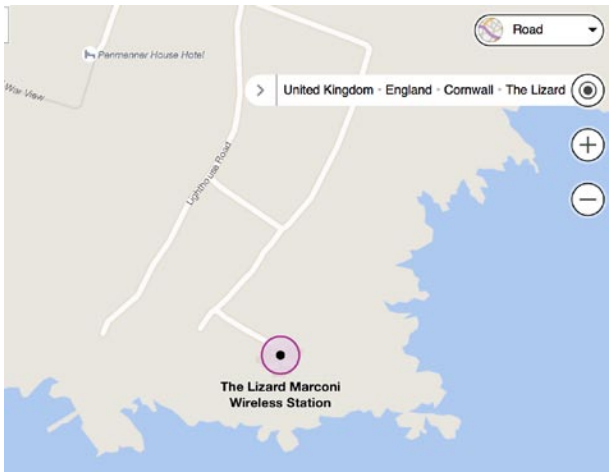

The hut in the foreground houses the Radio Station, the one behind provides holiday accommodation.

Wireless Cottage

Wireless Cottage

Whilst there on holiday, I was allowed to operate the key on low power.

In those days each dot and dash sent created a deafening spark and the operators very soon took to wearing ear plugs.

Marconi station c. 1901

The Morse dot required the key to be held down for five seconds and each dash required fifteen seconds

The letter H alone took more than half a minute to send.

Lloyds Signal Station.

Thanks, David ...Ed

Photos by David J. Thomas

Transverters

by David G4ASR

At the last club meeting (4th May) David gave a revealing insight into the various available transverter options and how to install them. It was a great evening interspersed with David's notable good humour and, specifically, with lots of hardware on display.

The most usual is the up-converter/transverter which when coupled to your HF rig, will allow operation at VHF or UHF or 23cms or upwards further into microwaves. Individual transverters are needed for each band. For example, driving from your HF rig at 28MHz, it is so easy to convert to 144MHz. Generally you need to adjust the drive to suit the converter and on "transmit" you would probably want to add a PA to boost the modest available output. Invariably a suitable RF power relay would then be needed to carry out the TX/RX switching to the aerial. These relays usually have SMA connectors and can have either 3GHz-18GHz or 26GHz ceiling rating at 100W.

You don't have to be a genius to connect everything together for exceedingly good results. But, good advice from David, …if at all possible, mount the whole assembly in a weather proofed box right up there with the antenna. This will negate losses otherwise experienced when the converter assembly is housed in the shack. Remember, the higher you go e.g, 23cms (1.2GHz) and up, the more losses you will have and more specialised the feed coax needs to be.

Microwave Transverters

For transverters for 1.2GHz and above, the drive requirement is usually at 144MHz (2M).

The 1296MHz V.2.2 transverter from Sg-lab.com

Do visit Sg-lab.com to see the 1296MHz V.2.2 transverter. It can handle up to 5W input drive and supply a useful 2W output at 1296MHz/ 23cms. David had one of these on display with the top removed and we were told it costs about £140 to purchase.

Now, for a 10GHz/3cm transverter, go to shop.kuhne-electronic.de and see the MKU10G4 unit. David showed us one of these and explained that as well as a 2M/144MHz drive, it could also accept 70cms; both at up to 5W. The TX output was, however, a mere 200mW over the range 10368-10370MHz. Very professionally built which is reflected in the price being just under £450!

The MKU10G4 from shop.kuhne-electronic.de

David explained that the "line of sight" rule at these frequencies certainly did not always apply as much greater distances were possible. He can readily receive GB3CAM beacon which is sited in Cambridge some 200Km from Hereford. The beacon has an output of 1W from an omni-directional 14x14 waveguide slot antenna. He has also worked F6DKW – a distance of 510Km.

For modest outlay (£35-£45 – eBay) you can start receiving GB3CAM by buying a 45cm SKY dish aerial complete with LNB giving better than 30dB gain over a dipole. The LNB mounted on the dish, will convert the 3cm beacon signal down to somewhere around 1250MHz (23cms) which can then be received on a TS2000 rig for example. This is obviously a receive-only* LNB (so called: Low Noise Blocking Amplifier) down converter, which is DC powered through the centre core of the the signal coax.

For information, some other beacons available are as follows:

10368,810MHz	GB3XGH	Rochdale
830MHz	GB3MHX	Martlesham

Continued opposite

Chambers Journal April 1891

The completion of the telephone line between London and Paris may certainly be regarded as a great scientific triumph.The first proposal for this new means of communication between the two countries came from the French government; but the plans and specifications were made out by the chief electrician to the British Post Office, Mr W.P.Preece,FRS.

The line works so perfectly that there is no need to speak directly against the transmitter, and in all respects the sounds are far clearer and freer from extraneous noises than are the local lines to which most business men are accustomed. As proof of this freedom from induction noises, it may be stated that a watch at Dover can be distinctly heard ticking in London.

The public are allowed to use the new telephone line for three minutes conversation on payment of ten francs (8s. 4d). A clockwork arrangement records the time during conversation, and shuts off communication at the end of the allotted three minutes.

127 years ago, hhmm ...Ed

Joining the 80M net from Liverpool

By Stephen M0MMU

Stephen joined the 80M club net on a recent Sunday morning. The photograph shows his "washing line" antenna so called by passers-by. This was a long wire strung out from his car and connected to his Ic7300, …with a tent peg for the Earth! Stephen says that the SWR was so low, it was hardly readable! …excellent reports when received in Hereford.

Thanks Stephen…Ed

Continued from opposite

850MHz	GB3SEE	Reigate
870MHz	GB3KBQ	Taunton
895MHz	GB3NGI	Antrim
900MHz	GB3AZA	Scarborough
905MHz	GB3SCX	Bell Hill
940MHz	GB3CCX	Cleeve Common
945MHz	GB3PKT	Clacton

Our thanks go out to David for an entertaining and revealing evening. When quizzed David admitted that* he only needed to output a few tens of watts on all bands as his QTH is strategically positioned at 770 feet ASL.

Wonderful David.....Ed

Contest Corner

by G1YBB

We're now 5 months into the 2018 contest calendar and thanks to the efforts of many members coming on the air I am pleased to say HARS is still sitting on top of the table and winning 5 bands out of 6!

Another good win on 50MHz has enabled us to pull a decent lead at the top of the table.

On 70MHz we lost March but won April with a good turnout, so we are just holding our lead.

Some great wins have seen us increase our lead on 144MHz.

Winning March and April 432MHz has enabled us to regain 1st on this band with a slim lead.

On 1296MHz a good win and a loss have seen us retain the lead on this band.

On the SHF bands we've lost some ground but have new members getting QRV so hopefully will improve. The good leads eked out on the other bands help supplement the overall score so it's important to keep pushing ahead on all bands.

In the 80m CC series of SSB, CW & data contests we are holding our own in 6th place.

In the FMACs Mark M0RXK is leading 6m and 4m, expected to take lead on 70cms this month and sitting 3rd on 2m but pushing hard..

73 Steve G1YBB

Thanks Steve ...Ed

Upcoming Contests:		
80m CC DATA	Mon 4 Jun.	1900-2030
144MHz UKAC	Tue 5 Jun.	1900-2130
144MHz FMAC	Tue 5 Jun.	1800-1900
2nd 144MHz Backpackers	Sun 10 Jun.	0900-1300
432MHz FMAC	Tue 12 Jun.	1800-1900
432MHz UKAC	Tue 12 Jun.	1900-2130
80m CC CW	Wed 13 Jun.	1900-2030
50MHz FMAC	Thu 14 Jun.	1800-1900
50MHz UKAC	Thu 14 Jun.	1900-2130
50MHz Trophy	16-17 Jun.	1400-1400

RSGB UKAC Overall Local Club Standings 2018

	Club (33 clubs total)	50MHz	70MHz	144MHz	432MHz	1.3GHz	SHF	Total
1	Hereford ARS	1000	1000	1000	1000	1000	527	5527
2	93 CG	675	677	820	751	741	600	4264
3	Worksop ARS	615	864	751	891	475		3596
4	Bolton Wireless Club	218	159	427	508	524	315	2151
5	Trowbridge & DARC	161	160	460	294	152	788	2015
6	Tall Trees CG	374	272	420	474	320		1860
7	Parallel Lines CG	111	183	67	133	180	1000	1674
8	RAF Waddington ARC	357	232	280	282	202		1353
9	Southport & DARC	196	189	240	256	154	3	1038
10	Northampton RC	123	116	345	195	108		887

Club Band Standings (top 10 shown)

	50MHz (27 clubs)	Total	70MHz (23 clubs)	Total	144MHz (29 clubs)	Total	432MHz (28 clubs)	Total	1.3GHz (24 clubs)	Total
1	Hereford ARS	35981	Hereford ARS	21826	Hereford ARS	44221	Hereford ARS	29612	Hereford ARS	22236
2	93 CG	24285	Worksop ARS	18849	93 CG	36253	Worksop ARS	26393	93 CG	16472
3	Worksop ARS	22142	93 CG	14768	Worksop ARS	33204	93 CG	22234	Bolton Wireless Club	11649
4	Tall Trees CG	13472	Tall Trees CG	5944	Trowbridge & DARC	20338	Bolton Wireless Club	15054	Worksop ARS	10571
5	RAF Waddington ARC	12849	RAF Waddington ARC	5058	Bolton Wireless Club	18875	Tall Trees CG	14042	Tall Trees CG	7126
6	Bolton Wireless Club	7852	Southport & DARC	4116	Tall Trees CG	18578	Trowbridge & DARC	8708	RAF Waddington ARC	4490
7	Southport & DARC	7067	Parallel Lines CG	3987	Northampton RC	15243	RAF Waddington ARC	8354	Martlesham RS	4000
8	Trowbridge & DARC	5779	Trowbridge & DARC	3490	Triple B ARCG	12572	Southport & DARC	7571	Parallel Lines CG	4000
9	West Kent ARS	5629	Bolton Wireless Club	3470	RAF Waddington ARC	12372	Northampton RC	5785	Southport & DARC	3434
10	Northampton RC	4442	Rugby ATS	3366	Southport & DARC	10601	Coulsdon ATS	5120	Trowbridge & DARC	3371

Don't forget to send in your best DX successes!

editor@harsjournal.com

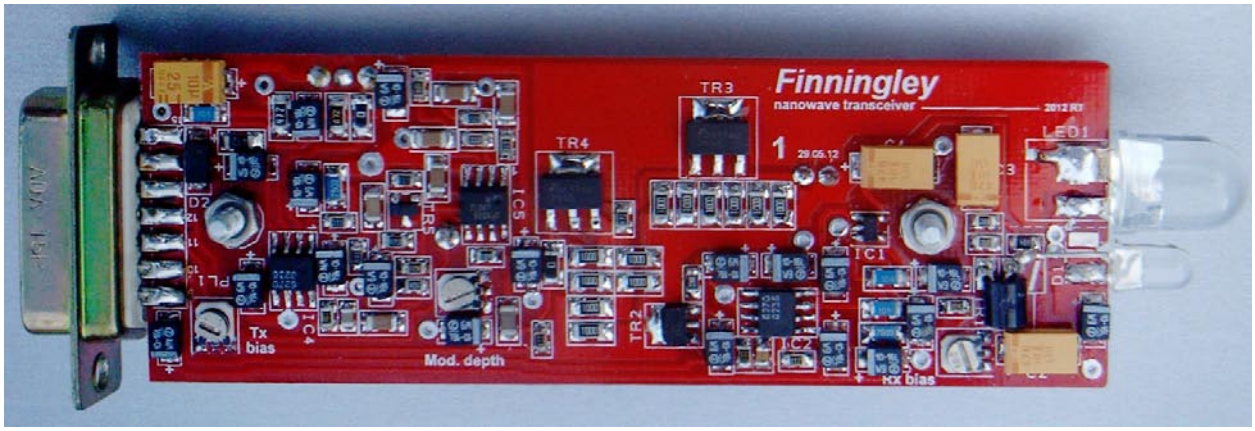

Communication Using Nanowaves

Permission and guidance has been given by Bernie G4HJW.

Going ever upwards in frequency, we eventually come to nanowaves as in "communication with optical light through the air". Please note that Lasers are specifically excluded from this text as they can be dangerous and are difficult for amateurs to electronically modulate.

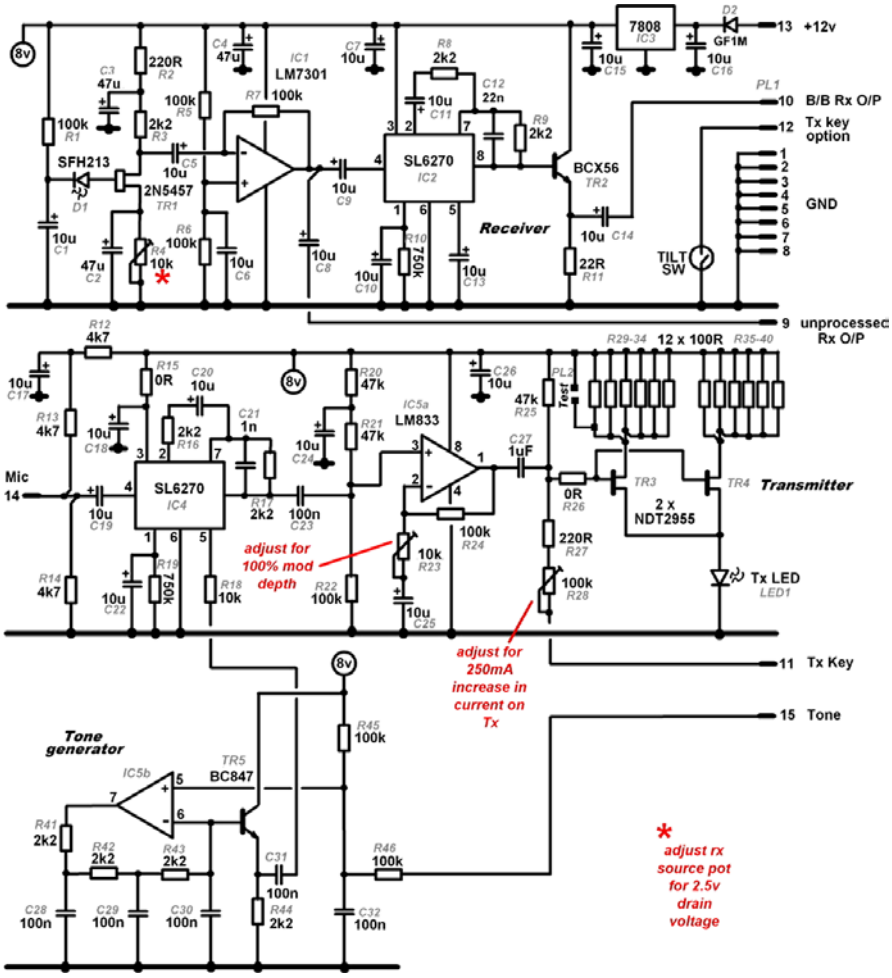

As with RF, a receiver and transmitter are needed. Red LEDs and high energy LEDs are used as transmitters because their frequency of 628nm has been shown to be effective in dealing with atmospheric S/N. In the picture of the prototype shown, a single LED is used for the TX and a photosensitive diode is used for the RX.

The emitted light has to be collimated light i.e., parallel rays. This can be achieved by using Fresnel lenses which also greatly amplify the signal. Fresnel lenses come in all shapes and sizes, and are not expensive. For extra power, a row of 10 LEDs has been used for the TX with a collimator fitted to suit.

Distances of 100Km are easily achieved but the difficulty is actually finding two locations at these distances (or more) with a line-of-sight path.

For a flavour of the technology see the accompanying circuits for a prototype transceiver …

Thanks Bernie …Ed

Employment Opportunities at ETL Systems

ETL Systems, based at Madley, have several positions available for software/firmware engineers. If you know anyone who would like to consider joining this excellent, worthwhile Company, then please contact Mike on 01432 272987 or editor@harsjournal.com in the first instance.

Club Personalised Merchandise

All items have your callsign and club details. For availability and prices please contact Mike G3LZM (editor@harsjournal.com).

T Shirt

Cap

Mug

An exotic China version is available.

Articles Wanted!

Please think about submissions/projects you might like to send in or see.

General topics and key words are listed below.

Members projects	Events	Training
Members station	Notices	QRP/QRO
Construction	Help	Illustrations
Items wanted	News	Photographs
Items for sale	DX	Early radio
Hints and kinks	Militaria	Restoration...

... or anything else that you think might be of interest to HARS members. If you have an idea for a submission, but don't know how to present it, feel free to ask for advice.

Please submit anything and everything to editor@harsjournal.com or talk with Mike at the Club meetings.

73s es GDX, G3LZM
Mike Bush (Editor)