H.A.R.S. Journal

Journal of the Hereford Amateur Radio Society

Issue No 15 • August 2018

Editorial

At the Royal Airforce Celebrations at Madley Airfield on the 26th May; wet weather it may have been, but the HARS radio tent lit up when we were honoured by a visit from the Right Honourable Madam Mayor of Hereford, Councillor Sue Boulter. Read and see pictures of the event.

Does Hereford need a 10GHz (3cms) beacon? Read and review what steps have already been taken to make this a possibility. Subsequent progress reports will be reviewed in the Journal until it is up and running….we are already well upon our way!....have a read.

Looking for local employment? …. In RF technology?....., see our new adverts at the rear of the Journal.

Ed.

HARS Reconnects

I get phone calls from various radio amateurs who tell me of their previous amateur radio connections with Hereford. One such call was from Malcolm Powell G8BOP, who now lives close to Dudley. Malcom has many associations with Hereford and wants particularly to be remembered to Stewart G3WRA. He was a friend of Bill G3HVX and of course Stewart Jesson. Malcolm saw the ETL and Club picture in the Hereford Times and decided to give me a call. Nowadays he operates occasionally with his FT101 and sometimes with a handheld on VHF. His email address is Palmer.malcolm1@sky.com

Great to hear from you Malcolm……
(Mike – Ed)

The Journal, Issue 14 (last issue)

Commendations and more Opto TX/RX information

Evening Mike,

What a good read read! - so much variety. Thanks for sending me a copy.

On the optical front, I do have a newer version of the Finningley transceiver. Its main difference is that is uses the tx LED as the receive detector as well, so no having to turn the assembly 180 degrees when going from rx to tx in order to keep both beams aligned to the same point. It was amiss of me not to mention that during our email sessions, but it is there on my web site, should your article generates any interest.

There's no shortage of things to do in amateur radio, is there? I'm just getting started with digital ATV (as a result of a BATC member asking about putting baseband digital over an optical link), so that might end up being really interesting.

Best wishes with the club and magazine, and once again, thanks for the magazine copy.

Bernie G4HJW

Thanks Bernie ...Ed

New HARS web site!

Coming soon - see herefordradioclub.uk

Intermediate Licence Course : Project Work

Dave Porter G4OYX with Paul Austin M6NLT and Eric Edwards GW8LJJ

Not all HARS members may be aware that to progress through the training from Foundation licence to Intermediate requires that the candidate prior to the exam demonstrates not only their practical ability with simple circuits and measurements during the course but also submits a project that they themselves have built.

Many candidates opt for a Morse oscillator kit or maybe a simple audio amplifier for example, a Velleman kit using a TDA2004 and are able to demonstrate their soldering prowess as well as connecting it up on the course and checking it works.

Paul, M6NLT who passed the last FL course in Feb 18 let it be known that he had decided to build a superhet receiver. This was quite an advanced departure from the norm so when he passed on the details of the kit he was proposing to use, the curiosity necessitated a bit more research!

"You buy this - you have good time"

For what Paul had selected was a Chinese "hobby" kit: type number HX108-2. This is best described by the positively glowing eBay (Chinglish) citation which follows:

- Features: two in the standard circuit.
- In the middle of the week has been adjusted in the 465 KHz.
- Shell plastic as a new material, never to return.
- Circuit at all levels have Ic test port.
- Circuit diagram, assembly drawings, and other parts of the list, complete technical documents.
- Volume: 115 x 65 x 25
- Frequency range: 525-1605 KHz
- Output power: 100 MW [!]
- Power supply: 3V (No. 5 battery) (optional)

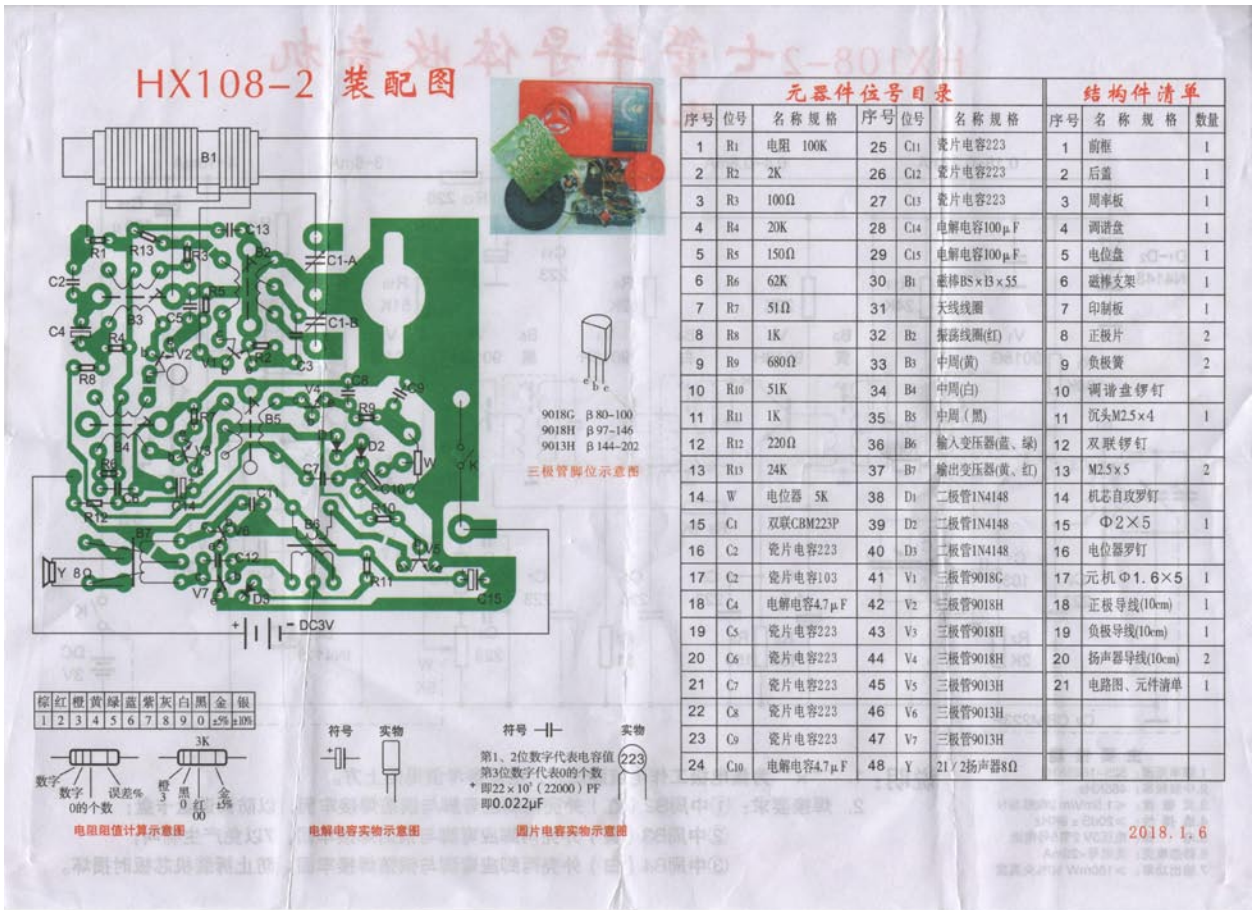

Fig. 1

- Circuit theory introduction: the main properties of the 108-2 7 transistor radio frequency range: 525~1605 KHZ; output power: 100 MW (max); speaker: 57 mm diameter, 8 ohm; power: 3V (No. 5 batteries second section); volume: 122 x 66 x 26. As shown in Figure 2.1 the electrical principle diagram. Seen from the figure, the whole machine contains 7 transistors, so called 7 tube radio. Among them, a triode V1 for converter tube, V2, V3 is in the discharge pipe, V4 detector tube, V5 for low frequency amplifying tube, V6, V7 for low frequency power amplifier tube.
- This kit does not contain a battery.

And again in English?

Er… yes! Best to say that it has seven transistors (rather than tubes!) It does cover medium wave only. The IF is 465 kHz rather than the usual Far Eastern 455 kHz. Two AA cells (copy to G4XTF!) are used in series giving a 3V rail. Two audio transformers are used for the push-pull output stage. Oddly the detector is the base and emitter junction of a regular silicon transistor. The maximum output is 100 milliwatt rather than the 100 Megawatt in the document!

Intrigued - I also bought one for the princely sum of £3.91 **including postage** from suntekstore-uk. It is possible to buy multiples of these kits for substantially reduced prices.

Unbelievable value

Like Paul, I considered it unbelievable that it was so cheap; as many will recall six transistor portables coming into the UK from Hong-Kong in the 1960s and retailing at 59/6d. Even in the mid-70's silicon transistor versions were sold at £3.99 or so in Hurst St, Birmingham. Granted they were complete and working and not a kit but all the same; we would be hard-pressed now to buy just the components for the price of this Chinese kit.

Included in the bag of bits is a quarto-sized sheet of thin paper showing the circuit diagram and the component list with a pcb layout. These are reproduced as figures 1 and 2. Apologies for the scan quality but the paper is of the sort that years ago would have been used for air-mail letters and so is very thin and rather translucent!

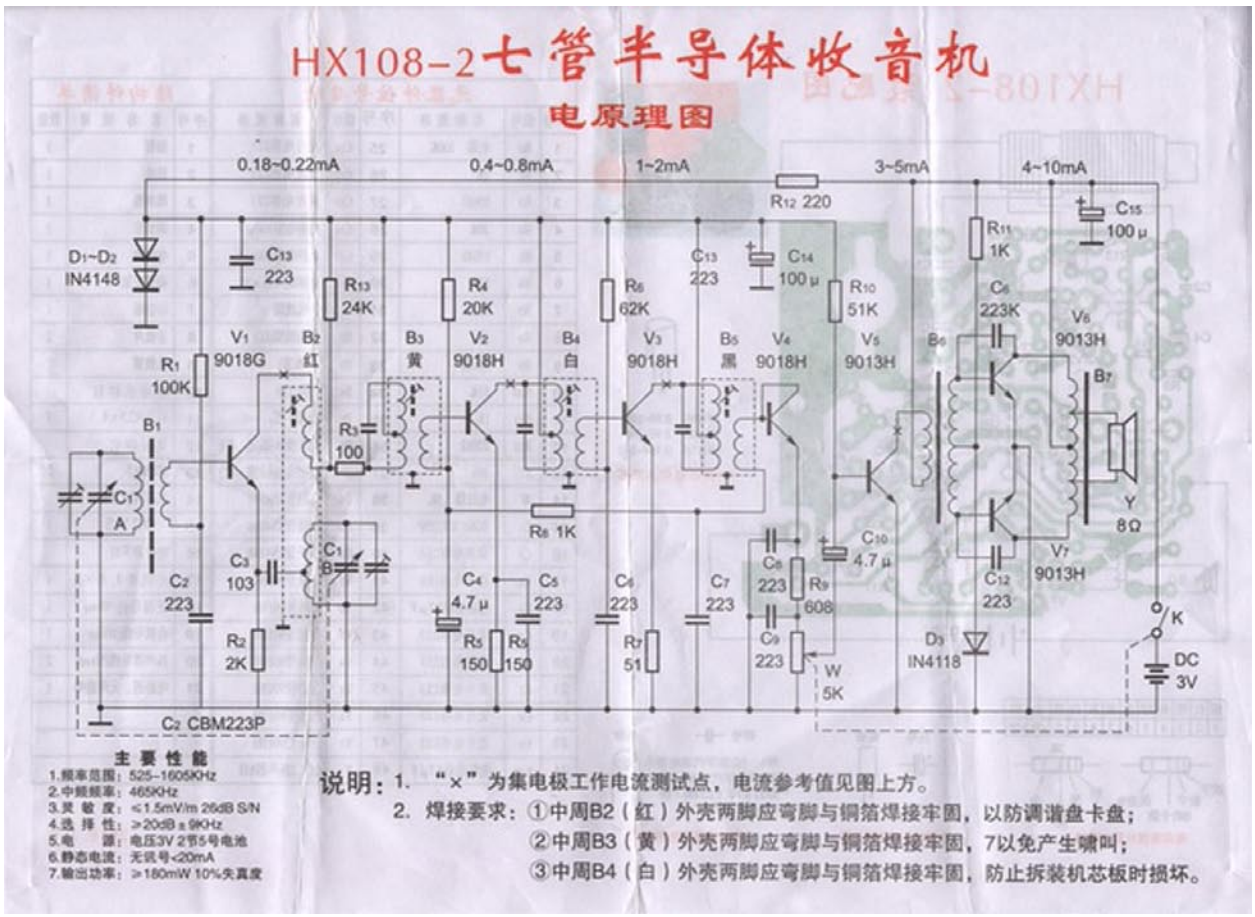

Fig. 2

All the hardware is included as well as a screen printed pcb showing the component placings. The document shows the resistor colour code and a generic worked example of 3000 Ω. There is a pin-out diagram of the transistors used including gain figures for the different suffixes possible, info on the + and – on vertical electrolytics and the marking 223 for the almost totally common, one-value 0.022 µF (22 nF, 22000 pF) ceramics employed because there is one sneaky 0.01 µF, 10 nF (103) ceramic in there as well.

Considering the rock-bottom price there is a fair sprinkling of premium ±5% E24 value carbon-film resistors including 62K, 51K, 24K, 20K, 2K and 51 Ω. For IL practice this is good as it requires advanced use of the resistor code over and above the regular, more well-known E12 values. Also, watch out for the jumbled number 1N4148 diode, which appears as 1N4118 in one situation!

Building the kit

It's best to arrange all the parts first in a line to see that all is present. If that's all OK then a foible of the kit's designer needs to be addressed and that is to check the circuit diagram for the X's in the printing. These represent points at which measurements can be made to check for correct operation usually by measurement of the current flowing. To permit this the pcb has gaps in the copper track that need closing with a bridge of solder whilst the pcb is clear of components. In the event of trouble-shooting being needed it would be easier to solder-wick a track open for a look if and when required.

Resistors, capacitors and transistors go in next followed by the volume control c/w on-off switch.

There may be trouble ahead

It is now that the in-built Chinese intelligence test happens. There are four canned RF transformers and two AF transformers. All the RF pinouts are the same and so are those for the AF pair. The component list specifies B2 – B5 for RF, the RF transformers themselves; are all colour-coded but which one is where, as the data is only in Chinese characters?

G4OYX asked Paul what did he do about this and his detailed reply is here:

HX108-2 kit found on Ebay

As regards the different colour Oscillator and IF coils.....the Oscillator was really easy to spot - the only one with no capacitor in the base.

I measured the secondary inductance and resistance of each IF coil; this showed that yellow had the smallest number of secondary turns and black the most - by a significant margin. Obviously black must be the final IF (B5) as it needs a high turns ratio to ensure that the silicon detector is always forward biased even with weak signals. I suspected that yellow would be the first IF as lower turns means less loading on the mixer oscillator (and less risk of saturation at a point in the circuit where only one level of bandpass filtering has been carried out).

To be on the safe side I decided to opt for the old tried and tested mantra: If all else fails read the instructions (even if they are in Chinese!). On the bottom left of the parts list, it gives the resistor colour code in numbers 1 to 9 together with the corresponding Chinese character for each colour. I know the resistor colour code (therefore for the IF coils black = 0, yellow =4, white = 9). This meant I could read off the Chinese character for each coil. Referring to the parts list I was then able to confirm that yellow is IF1 (B3), white is IF2 (B4), black is IF3 (B5).

That's the RF sorted; now what about the audio?

On both the circuit and on the pcb B6 is the driver transformer and B7 the output one. G4OYX reasoned that it was easy to spot the centre-tapped push-pull sides for base drives in on one and collectors out on the other. Measuring the other separate windings showed tens of ohms on one transformer and a low

value on the other so the lower one was out to the loudspeaker. Beware of the circuit diagram here as the output transformer is shown as a pseudo auto-transformer but it's not, there is a separate secondary! The tens-of-ohms single winding was the collector load for the driver transistor V5. Green is driver and yellow is output.

Final assembly

The variable capacitor is next and don't forget the L-shaped piece of plastic between it and the pcb. This holds the ferrite slab antenna in place once you have slid it in. Solder the four Litz wire spills to the track side of the pcb after checking out the correct orientation.

Solder up the positive and negative conns to the battery holders, on the circuit the on/off switch is shown in the positive… but it's really in the negative. With side-cutters remove the moulded plastic lugs on the case for the LSU as it just won't displace them enough to click- fit. Pop on some Bostik (other glues are available) to secure the LSU.

Now you need the tuning dial and fix to the capacitor but don't add the self-adhesive lined pointer sticker yet as it covers the screw fixing and you may need to remove that again to fault-find. The one on the volume control has no limitations. Next mount the pcb in the casing and solder the LSU and battery connections after fitting the sticker.

And switch on…

All was OK for G4OYX, the receiver worked and a few stations could be heard, but they were in the wrong places on the dial so alignment was required. Luckily Paul, M6NLT had described the process…

Prior to calibration, it is helpful to ensure that the coil on the ferrite slab antenna (B1) is offset towards the end as shown in the manufacturer's diagram next to the parts list. This is because B1 is also part of the RF tuned circuit, and the value will need to be adjusted during calibration. Maximum inductance occurs when the coil is in the centre, and minimum when at one end. The offset position (as shown) allows adjustment in both directions. On my particular radio, the optimum position after calibration turned out to be with the edge of the coil flush with the end of the ferrite slab.

As regards calibration, I used a modulated RF signal generator together with a DVM with analogue trend bar which I connected across the speaker.

For IFs, I set the receiver main tuning to around mid-band, (circa 1 MHz) making sure that there were no stations around there. I connected the sig gen to transistor 1 base (V1) via a 0.1 µF capacitor. Keeping the sig gen output as low as practicable at all times to avoid AGC action, I set the sig gen to 465 kHz and adjusted B5, B4, B3 (in that order) for maximum output.

Looking at the dial calibration, the highest and lowest frequencies indicated are 1.6 MHz and 530 kHz respectively. 1.6 MHz is just far enough away from BBC Hereford and Worcester (Woofferton - 1.584 MHz) to get away with. At low frequencies, the lowest frequency readily detectable station during daylight hours is Wrexham, BBC Radio Wales on 657 kHz, so no problem with 530 kHz.

I connected the sig gen to a short coil (approximately ten turns wound on a Kitchen Roll cardboard inner) which I placed a couple of feet from the ferrite rod at right angles roughly in line with the centre of the ferrite slab. The rationale for the perpendicular positioning is to minimise direct coupling between the sig gen coil and B1. Similarly, for the central positioning it's to prevent the field strength from being larger on one side of the ferrite slab. Failure to do so would not affect steps 1 and 2 (below) but might affect the settings of the RF tuned circuit in steps 3 and 4.

1. *Set the radio dial pointer to 530 kHz. Set the sig gen to 530 kHz and adjust the osc coil B2 for max output.*
2. *Set the radio dial pointer to 1.6 MHz. Set the sig gen to 1.6 MHz and adjust the osc trimmer capacitor for max output.*

Repeat 1 and 2 until no further adjustments are needed.

3. *Set the radio dial pointer to 530 kHz. Set the sig gen to 530 kHz and slide the coil B1 along the ferrite slab for maximum output.*

4. *Set the radio dial pointer to 1.6 MHz. Set the sig gen to 1.6 MHz and adjust the RF trimmer capacitor for max output.*

Repeat 3 and 4 until no further adjustments are needed.

As a sanity check, I tuned the radio to the previously mentioned Hereford and Worcester, and then BBC Wales 657 kHz to make sure they were in the right area. I then tuned to a weak station at the top end of the band and "tweaked" the RF trimmer capacitor to verify by ear that the RF tuned circuit appeared to be correctly set for maximum gain. Afterwards, I reset the RF trimmer capacitor with the oscillator and sig gen as per step 4.

I then compared the performance to some vintage transistor portable radios.

The HX108-2 radio works really well. I have a 6 transistor Binatone Playboy, and a 7 transistor Bush TR82 (both 1960s with Germanium transistors). The HX108-2 is better than the Binatone and on a par with the Bush, despite the Bush having a much longer ferrite rod antenna..

Making the most of the test gear…

To achieve accurate dial calibration it appeared that first an accurate setup of the IF 465 kHz was required. At G4OYX there was available

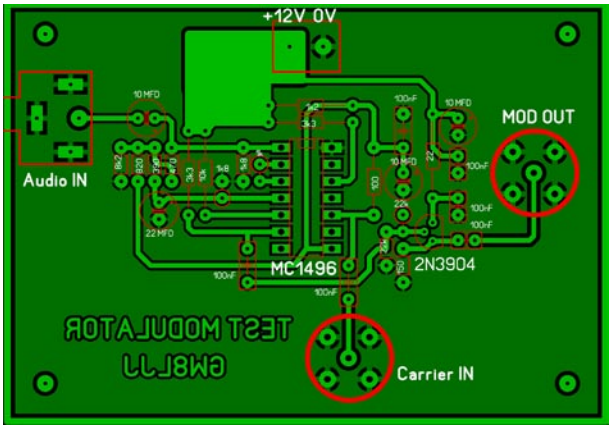

Fig. 3

the "Multirock-2": a DDS synthesiser design by GW4GTE, so a guaranteed 465 kHz was there but no modulation and tune-up on plain carrier without an S meter is not easy.

What was needed was a device to modulate the output of the DDS.

Project Kit Designer Dave GW4GTE from near Wrexham and Kit Facilitator Eric GW8LJJ from Barry have the occasional face-to-face meeting and one was scheduled for early July. They had picked Ludlow as a half-way point and invited me to their meeting. I mentioned to Eric that I had the Multirock-2 and was in need of some mod, he said to leave it to him.

Well he did not disappoint as on the day he brought along a small pcb upon which

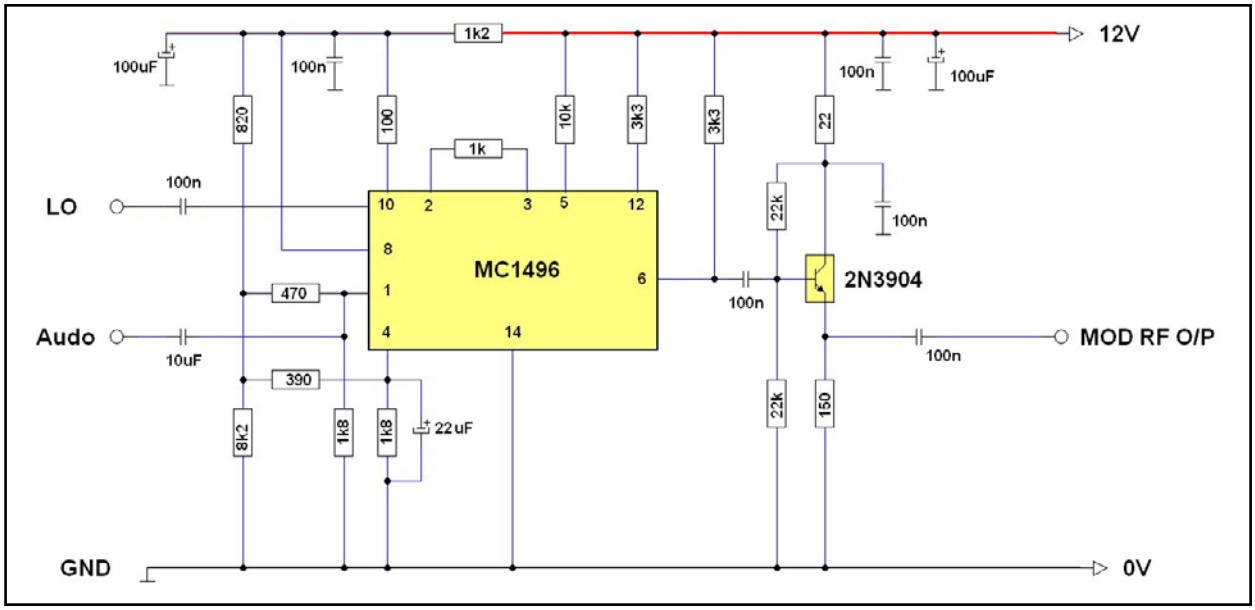

Fig. 4

was mounted a LM1496 double-balanced modulator chip and peripheral components along with BNC sockets for the RF input and output and a phono socket for the modulation. 12 VDC was required at a few mA. Eric had used to data sheet to see how to unbalance the DBM to generate the AM, this being one of the options by the manufacturer. Eric has provided the full circuit and a pcb layout for this article.

In action, on test

Rather than connecting directly to the pcb as Paul did, an-air spaced coil of about 30 µH was used to radiate the modulated 465 kHz after connecting up an AF tone source to the mod-input on the GW8LJJ pcb; the IFs tuned a treat. Then just as Paul did with the air-spaced coil the rest of the alignment was performed by selecting and switching between the 530 kHz and 1600 kHz memories in the DDS.

Eric's circuit and pcb layout is shown as Figure 3 and 4.

Conclusion

Well what a find of a project by Paul M6NLT, though by the time you read this he will undoubtedly have passed the Intermediate exam and may well be sporting a new 2E0 callsign!

Enjoy the ride back in time, you may even look out your Denco MTO1 or the classic Advance J1 valve alignment oscillator!

References

Dave GW4GTE has kits on http://www.s9plus.com

Also, look up HX108-2 on ebay.

Thanks, David ...Ed.

HARS radio equipment available for loan to Club members or for purchase

The following list of equipment is available for loan to Club members. The loan period is 3 months and members wishing to use the equipment will have to sign a simple agreement which covers the loan terms. If you wish to borrow then please contact Duncan (Hon Sec) M0OTG.

- Grid Dip Meter MFJ-201
- Buddipole 10-40M portable antenna with tripod and carrying case.
- Yaesu FT450 All bands to 50MHz. Needs a 12V PSU
- Pixie 7MHz QRP kit. Needs assembling.
- Baofeng UV-5R 70cms/144MHz hand-held complete with accessories.

Go portable with the Buddipole! Ed.

The HARS Technical Library

This is the new lending library thanks to Bob G3IXZ, who is the "owner". The library is of course at Hill House - thanks to Geoff G8BPN. Great stuff here…, do take a look.

Subjects covered include: Antennas, Technical, Reference, Historical, Equipment and QRP.

This is really good Bob…thanks ...Ed.

"Who invented Morse Code? "

Ask the question and most people will immediately answer Samuel Morse but is this in fact the case?

Had it not been for Gavin Weightman's fascinating and informative book "Signor Marconi's Magic Box", Samuel Morse would have been my instinctive response to this question also.

Despite studying science at Yale in 1791, Samuel Finley Breese Morse yearned to become known as a great artist. In fact, following a period of study he did achieve some success in London but was unable to make a living as an artist in America.

During his return passage from Europe he spoke with several fellow passengers concerning the use of electricity and the idea of producing an electric telegraph.

Whilst he did not have the money or the engineering skills to develop a commercial product, he later had the good fortune to meet the inventive and prosperous Vail family of New Jersey who had amassed a fortune from the production of steam engines and railway track. Following discussions an agreement was made that Alfred, his brother George and Samuel Morse would share the rights and any profits arising from the production of a successful telegraph system.

The initial idea put forward by Morse was that they would apply an individual number to thousands of complete selected words. These words could then be sent using an electric current to a machine at the other end of the line.

The team spent many hours trying to develop this complicated system together with a machine capable of decoding it. The task was immense and they came very close to giving up on the whole project. However, at the twelfth hour Alfred Vail suggested that a simple lever with an up and down motion could easily print out dots and dashes as an alternative to the five thousand complete words on which the team had been working.

Following an in depth study of the alphabet, Alfred discovered that of all the twenty six letters the letter E

Alfred Vail 1807-1859

was the one that was most frequently used and so he represented it with a single dot. Each of the other letters were assigned their own code, for example K became dash dot dash. The first commercial telegraph system was completed in 1884 using the code invented by Alfred Vail.

Despite inventing the code Alfred allowed Samuel Morse to take all the credit and honours that followed.

Smiles from miles

David
G4OGW

Thanks, David ...Ed.

Presentation model Vibroplex

Circa 1970. Jewelled. Only suitable for speeds of 22wpm and above.

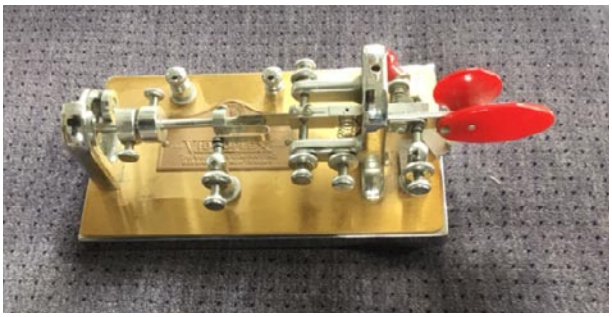

One rainy Saturday (26th May)

The on and off rain could not thwart the success of the MESC (Madley Environmental Study Centre), Royal Air Force anniversary celebrations at Madley Airfield. Although no longer operational, this airfield was used to train aircrew during the 2nd World War.

The picture shows an exceptional visitor to the Radio tent. This is hero William (Bill) Gilmore sat next to Bob G3IXZ. Bill was RAF Aircrew during WW2 and he passed out as a wireless operator from the Madley Radio School in 1941. The crew training aircraft of the day were Proctors and Dominies, the latter a two engine bi-plane developed from the civilian Rapide. The Radio equipment which Bill had to learn to operate, were 1082's and the ubiquitous 1154/1155 transmitter-receivers. On the Proctor, the antenna was a 40 foot long trailing wire but in the case of the Halifax, the trailing antenna was 240 ft.

After eight night operations over Düsseldorf - in Halifaxes, Bill was switched to operations in Dakotas flying over the Himilayas from postings in the Far East in support of Chang Kai Chek fighting the Imperial Japanese Army.

Thanks for the introduction Bob ...Ed
In my early days I had an 1155E RX

At the MESC show we were really delighted to meet a very important person! Hereford's Madam Mayor (Cllr Sue Boulter) called in to the Radio tent to see for herself how things were progressing. Bob G3IXZ, former Chief of Madley Satellite Station, is pictured with Sue.

A real pleasure to meet you, Sue ...Ed

William (Bill) Gilmore and Bob G3IXZ

Lucy GK9LCY

MESC Radio Tent

The Last Communications Manager at British Antarctic Survey

Alan Messenger, MW0YCC

In April 2016 I was lucky enough to pass selection with British Antarctic Survey to deploy to Antarctica for 18 months at Rothera Research Station. Rothera is the largest of the British stations, based on Adelaide Island (IOTA AN-001) on the Antarctic Peninsula.

As Communications Manager, I was responsible for all IT infrastructure, telephony, networks and satellite communications systems (VSAT, Iridium etc) as well as the maintenance of all of the HF, Aero VHF, Marine VHF systems, repeaters, field communications equipment and aircraft navigation aids. On top of this during the summer season I would work in and line manage the operations tower. Myself and a team of 5 Radio Operators would be the central point of contact for aircraft transiting from South America to the South Pole, as well as shipping and boating traffic, mobile and static deep field parties and forward operating bases. Trying to do all of that on the highest, driest, windiest and coldest continent on the planet certainly proved to be quite a challenge!

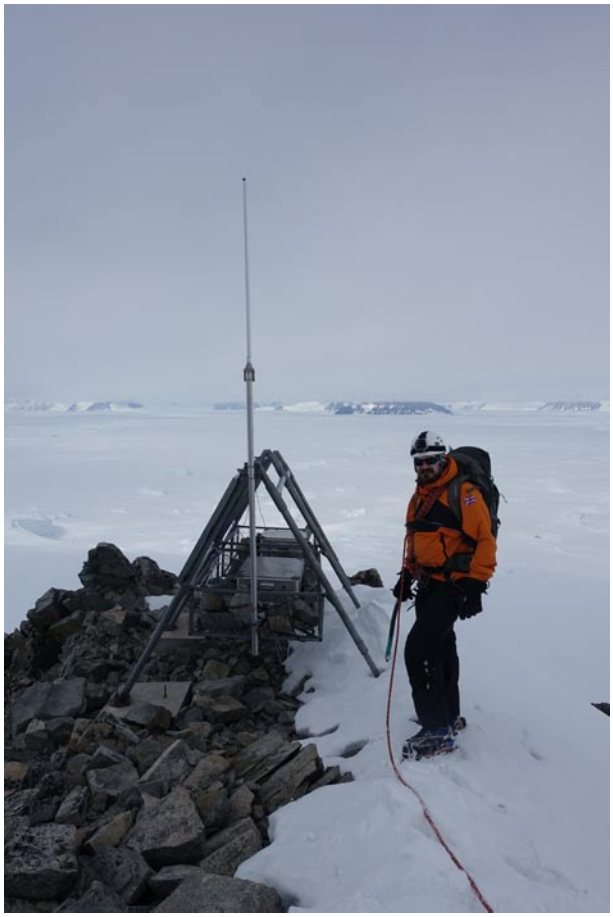

I was also able, on occasion to do some HF operating from the station when there was a clear window in duties. I managed to obtain the call VP8DPJ. VP8 Calls, of course cover not only the Falkland Islands, but the BAT, South Georgia, South Sandwich Is, South Orkney Is, South Shetland Is. We also had a 10m beacon, VP8ADE. HF conditions were incredibly poor for my whole deployment, and look set to get worst still for a little while yet, but I was able to make a few contacts back in the UK, including John MW0XOT who was portable using 50w on 20m band.

The job has now been separated in to three separate roles as the work load was becoming unmanageable and finding people with the right skills set was becoming more difficult. I will be returning to Antarctica for a few months at the end of the year operating this time from the ill fated Halley Station and hope to do a talk on my experiences in the future.

Thanks, Alan. Good luck with the next deployment! ...Ed.

No Licence, No Equipment, yet VHF/UHF reception is at your finger tips!!

Web SDR, that's how! Using Web Software Defined Radio it is quite normal nowadays to listen to amateur radio from the comfort of your armchair using your iPad on your knee.

Whereas HF is also possible, from some forty worldwide RX sites, the VHF/UHF site at Farnham, has a magnificent system of all-mode, remote SDR receivers, useable by anyone with a standard web browser. The software that makes this possible was developed by www.sdr.org The site is at IO91OF, latitude 51.23, longitude -0.82

The bands covered are;

- 144-146MHz. 2Mtrs
- 432-434MHz. 70cms Narrow band & Beacons
- 434-436MHz. 70cms FM & HAB & Satellites
- 436-438MHz. 70cms Satellites
- 1296-1298MHz. 23cms NB & Beacons
- 10368-10370MHz. NB and Beacons

If you wish to log in with your callsign, you need to go to www.websdr.suws.org.uk You will immediately hear APRS on 144.8MHz which is the default start frequency. The system will support 25 users all at once. You will appear on the scale and others can see what frequency you are listening to. You will be able to hear everything and in a scalar/graphic form, and is everything you would expect from a 90 foot mast at Farnham Hill.

With thanks to Martin G8JNJ, for permission to use this information. ...Ed.

Don't forget to send in your best DX successes!

editor@harsjournal.com

Is the internet, millennials or FT-8 killing ham radio?

By Dan Romanchik, KB6NU

Amateur radio bloggers love to write about the demise of amateur radio. To wit, we have:

- K0NR's Is the Internet destroying amateur radio? (http://www.k0nr.com/wordpress/2017/11/internet-destroying-amateur-radio/)
- N0SSC's Millennials are killing ham radio (http://n0ssc.com/posts/583-millennials-are-killing-ham-radio)
- PE4BAS' Is FT-8 damaging amateur radio? (https://pe4bas.blogspot.com/2018/04/is-ft8-damaging-hamradio.html)
- NZ0T's Did Joe Taylor K1JT Destroy Amateur Radio? (http://www.ei5di.com/jt.html)

Of course, none of these posts are really saying that the internet, millennials, or FT-8 has killed amateur radio. What they are saying is that all of these are changing amateur radio as we know it. Well, duh, the way we live our lives changes every day. Why should amateur radio be any different?

For example, Bob, K0NR, discusses how the operation of remote stations is changing the game of DX. Can you really claim that you worked a DX station if you rented time on a super station? I've written about that topic, too (https://www.kb6nu.com/dx-advisory-committee-wants-to-put-the-screws-to-remote-operation/).

There has also been much written about how FT8 is changing the amateur radio game. One blog post (https://ve7sl.blogspot.com/2017/10/160m-ft8-end-of-era.html), talking about the effect of FT8 on 160m operation, even goes so far to say that this is the "end of an era." On DX World, the results of the poll, "FT8 – Damaging to Amateur Radio?" (https://dx-world.net/yes-or-no-a-poll-on-ft8/) show more than half of the respondents think that FT8 is damaging amateur radio.

I specifically used the word "game" in the previous two paragraphs because that's exactly what's changing. The physics of amateur radio certainly isn't changing. Our transmitters are still generating electromagnetic waves like they have been for decades, and on the HF bands, anyway, those radio waves are bouncing off the ionosphere just as they have been for more than the past 100 years.

What's changing is the human component. By that I mean what's changing is how we think people should participate in the hobby. The hams that are complaining that the internet or millennials or FT8 is killing amateur radio are really just complaining that people aren't participating in amateur radio the way they want them to participate.

Here's where we talk about millennials. In his blog post, Sterling, N0SSC, suggests that setting up remote stations is one way to engage young people. He writes, "I believe that remote operating, and other internet-assisted means of ham radio operation, are critical to youth engagement."

He's also big on an idea he calls "ham radio hackathons." He writes,

"A hackathon isn't a coding competition. It's explained well in this Medium article (https://medium.com/hackathons-anonymous/wtf-is-a-hackathon-92668579601). It goes even further than that, not limited to coders and engineers, but open to thinkers, doers, philosophers, system engineers, math people, teachers, students, artists, stakeholders…anyone with an interest in **solving a problem with technology**."

I support both of these ideas, but I think that millennials (and, to be fair, it isn't just millennials we're talking about here, but any newcomers to the hobby) need to step up and get these things going. I don't think it's my job to try to get kids interested in amateur radio. I don't even know if that's really possible. What I can do, however, is be there to encourage and support kids (and anyone else that expresses a sincere interest in amateur radio).

For example, I'm not sure how fruitful it would be to set up my station to be remotely operable and then saying to some kids, "Hey, come and operate my station." What I think

would be more fruitful is to say to a kid, "Hey, come help me set up my remote control station, so that we both can use it." Then, it turns into a learning situation, and we both gain from the exercise.

The same kind of thing has to happen with ham radio hackathons. The motivation has to come from the ground up, not the top down. I do hope that this idea gets off the ground, though, and I'm standing by, ready to support this effort however I can.

I think that millennials (I'm really getting tired of that term, by the way) need to grab the bull by the horns and take amateur radio in the direction they want it to go. Feel free to kill amateur radio as we know it. Make it better!

When he's not trying to figure out how to save amateur radio, Dan builds stuff, blogs about amateur radio at KB6NU.com, teaches amateur radio classes, and operates CW on the HF bands. Look for him on 30m, 40m, and 80m. You can email him about what you think is killing amateur radio at cwgeek@kb6nu.com.

Thanks, Dan ...Ed.

Sid & Charlie

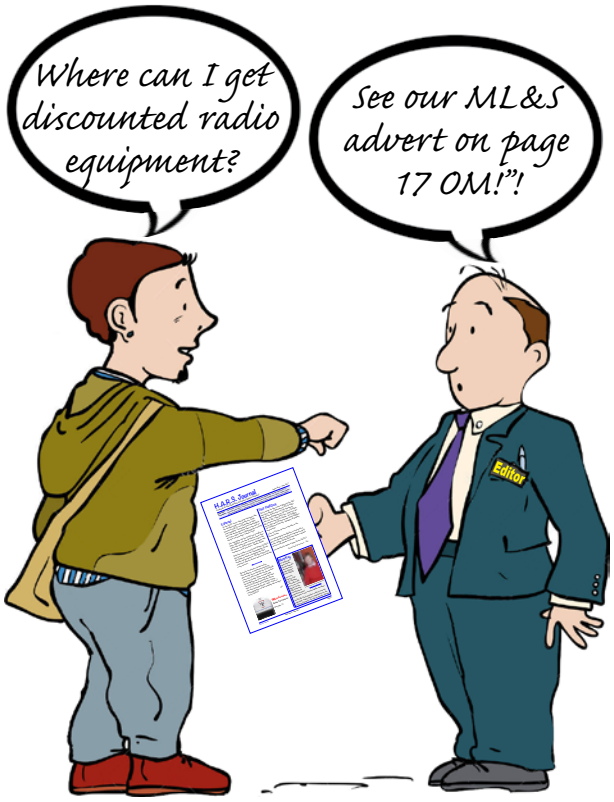

Get your free copy of A Field Guide to Simple HF Dipoles

by Dan Romanchik, KB6NU

A link to *A Field Guide to Simple HF Dipoles* (http://www.dtic.mil/dtic/tr/fulltext/u2/684938.pdf) was posted to reddit recently, and I liked this document so much that I thought I would share it with you. It was originally written for the military, but is now available for free from the Defense Technical Information Center.

The preface to this document reads:

> "Under project Agile, Stanford Research Institute has supplied several teams to assist operating personnel in improving the performance of field radio networks. In this work, it has been observed that U.S. military and civilian antenna manuals often contain misleading information regarding the operation of field antennas and tend to be overly complex. Consequently, this guide has been prepared to assist in training personnel concerned with the construction of simple HF antennas in the field."

I must say that *A Field Guide to Simple HF Dipoles* does this very well. It not only explains how dipole antennas work, it also does a very good job of describing the basics of radio waves and propagation. And it does this without getting overly technical.

For example, below is Figure 10. It's used to describe current flow in a dipole antenna.

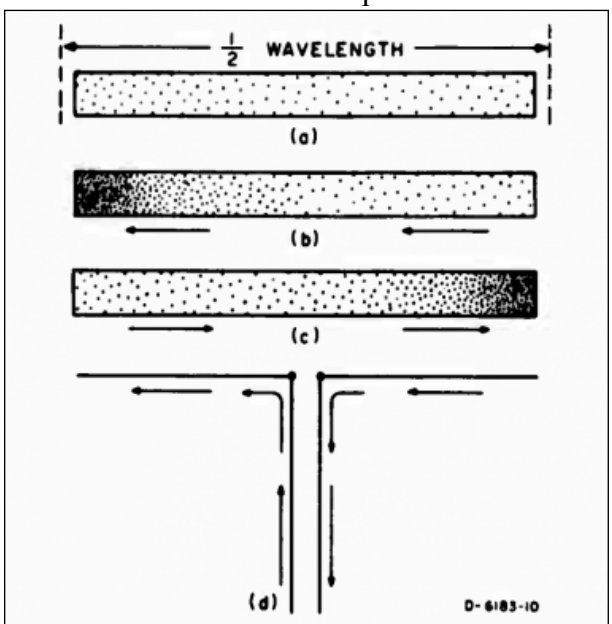

FIG. 10 CURRENT FLOW IN DIPOLE ANTENNA

The *Field Guide* reads:

> "Electric current in a conductor consists of the flow of small particles called electrons. Figure 10(a) represents a dipole with electrons in it. When the transmitter is turned off, the electrons distribute themselves evenly throughout the dipole, as shown. All electrons repel each other and try to get as far from each other as possible; that is how they achieve the uniform distribution show in Figure 10(a). When the transmitter is turned on, the electrons flow back and forth from end to end as shown in Figures 10(b) and 10(c). First the electrons flow to the left and crowded at one end as shown in Figure 10(b). Second, since the electrons repel each other, the push off to the right and get crowded together at the other end, as in Figure 10(c)."

It then uses this description to talk about voltage and current distribution along a dipole antenna:

> "The difference between voltage (volts) and current (amperes) in a dipole is also illustrated by Figs. 10(b) and 10(c). You can see that the maximum flow of current is going to be in the middle of the dipole. An observer at the center of the dipole would see the electrons rush past, first one way and then the other. The center is the maximum current point. Very little current flows near the end of the dipole; in fact, at the extreme ends there is no current at all for there is no place for it to go. However, at the ends of the dipole, there is a great change of voltage; when the electrons are densely packed, this represents a negative voltages, and when there is a scarcity of electrons, it represents a positive voltage. Thus you can see that the voltage at each end swings alternately positive and and negative. An end of the dipole is a maximum voltage point."

A Field Guide to Simple HF Dipoles is packed with all kinds of goodies like this. Download it (http://www.dtic.mil/dtic/tr/fulltext/u2/684938.pdf) right now.

When he's not building dipoles or teaching ham radio classes, Dan blogs about amateur radio, writes exam study guides (www.kb6nu.com/study-guides), and operates CW on the HF bands. Look for him on 30m, 40m, and 80m. You can email him about your experiences with simple HF dipoles at cwgeek@kb6nu.com.

Thanks, Dan ...Ed.

HARS 3cm (10GHz) Beacon

Might we have our own 3cms Beacon? Bernie G4HJW (Cambridge Club) has gifted to us, a unipolar slot antenna as the basic building block. Now with your help, I intend to get this set up. A quick look at the Beacon map and you will soon see that Herefordshire (and beyond,) is without a Beacon for 3cms… such a handy facility for assessing conditions and many home-station setting up; and test procedures.

The points to be considered are itemised as follows.

- A significant transmitting site will need to be found.
- The Beacon will need to be registered and call-sign applied for. Though Hereford may be a sensitive area.
- An FSK transmitter will be needed. Output 1W.
- The slot antenna will need to have a weather-proof housing.
- The input connector is SMA to waveguide transition.

Thanks, Bernie. Any help our readers are willing to give will be gratefully received. I hope I can follow this through. ...Ed.

The 2 x 8 slot 3cms unipolar slot antenna gifted from Bernie G4HJW of the Cambridge Club. It is set for frequency 10.368GHz with 28dB return loss.

room hire

Want to run a course or hold a meeting in easily accessible, professional surroundings, with catering available and plenty of car-parking?

We can provide well-equipped meeting or training rooms for hire in both Hereford and Worcester. We have a range of rooms sizes on offer for large or small groups. Rooms can be arranged to suit your requirements. We can supply data projectors, flip charts, food and other refreshments

Both locations easily accessible from all directions

Room hire charges per day range from £40 for a small syndicate room to £150 for a large conference room (no VAT). The larger rooms are air conditioned and equipped with data projector/TV and video, flip charts and pens.

Prices for rooms vary so please call us on 01432 274310 or visit or see www.hwgta.org/room-hire to ensure we can meet your specific needs.

- Hereford and Worcester locations
- A variety of room styles
- A variety of room sizes
- Data projectors and laptops
- DVD players/screen
- Flipchart, pens and stationery
- Great lunches
- Teas and coffees/refreshments
- Free parking
- Great service

Refreshments (including lunch and breakfast) are available on request.

For further information contact us on: info@hgta.org or call: 01432 377027

Employment opportunities at ETL Systems

ETL Systems are based at Madley where they design and manufacture RF distribution equipment. The Company have several positions available for software/firmware engineers. Also, positions available for production technologists and pcb design personnel. Apprenticeships too!

If you would like to consider joining this worthwhile Company please contact them direct on 01981 259020 or if you wish to discuss with me (Mike) first of all, then please email editor@harsjournal.com or call 01432 272987.

Club Personalised Merchandise

All items have your callsign and club details. For availability and prices please contact Mike G3LZM (editor@harsjournal.com).

T Shirt

Cap

Mug

An exotic China version is available.

Articles Wanted!

Please think about submissions/projects you might like to send in or see.

General topics and key words are listed below.

Members projects	Events	Training
Members station	Notices	QRP/QRO
Construction	Help	Illustrations
Items wanted	News	Photographs
Items for sale	DX	Early radio
Hints and kinks	Militaria	Restoration...

... or anything else that you think might be of interest to HARS members. If you have an idea for a submission, but don't know how to present it, feel free to ask for advice.

Please submit anything and everything to editor@harsjournal.com or talk with Mike at the Club meetings.

73s es GDX, G3LZM
Mike Bush (Editor)