H.A.R.S. Journal

Journal of the Hereford Amateur Radio Society

Issue No 17 • December 2018

Chairman's Seasonal Message

Christmas and the New Year is just 'around the corner', although last Christmas seemed only last month! I have been dropping all the usual hits to the family regarding a new transceiver, but I think I stand a better chance of winning the Lottery and I don't even participate.

Hereford Amateur Radio Society has had a wonderful year, with plenty to report. However, I will leave that for the AGM. The membership has grown once again and it is really nice to see new members; which I personally welcome. Furthermore, it looks like HARS is en-route to win the RSGB UKAC contest.

More importantly, it gives me the greatest of pleasure on behalf of the committee to wish all our club members a

Merry Christmas and a *Happy New Year*!

73 Derek G3WAG
Chairman

Editorial

I have lately heard and read, that amateur radio is supposed to have had its day. It is true that we amateurs are all served nowadays with near-professional TX/RX "black boxes" which have largely removed the options to "build it yourself" not only because required technical standards are now exceedingly high.

But, nevertheless, social aspects of communication by radio haVE indeed flourished. The HARS Committee have realised this and have supplemented with a healthy monthly club-night atmosphere and ocassionally with arranged talks; and where the "tea and biscuits" bywords summarise all that is good about coming along and having a good natter.

...Ed

From all the staff at the Journal - Happy New Year!

A blast from the past!

by Paul Griffin G0DJF

Hi Mike

I'm living in Solihull these days, I haven't been involved in amateur radio since I moved up here in May 2006, and I hadn't been on the air for a good while before that.

Anyway, we had a visit last week from some American friends and it turned out that he is an active ham – NF1U. That got me thinking about the hobby again and to cut a long story short I dug my rig out of its box in the loft, where it's been for 12½ years, hooked it up to the washing line in the garden as an antenna (it tunes surprisingly well! J), and I'm seriously thinking of setting up a station again.

So, naturally I googled HARS to see what's going on with you guys, and found the HARS website. I'm very pleased to see the level of activity in the club, and I must say I'm VERY impressed with the professional newsletter. What a great job!

So I thought I'd just give you a shout to say 'Hello'. I see you've got Adrian and Tim on the committee – please say hello to them for me, and anyone else who remembers me down there. Speaking of the committee – I'm attaching a couple of photo / scans. One is the Peter Manders sketch of the 1989 committee and report that went with it in the Hereford Times, remember that? I know half of that committee are no longer with us – I'd be interested to know how many of us are left?

The other photo and scan are of Eddie and me receiving the Frank Hoosen trophy for 1989 NFD 20 metres, for which we were part of the team. They're all a bit too backward looking for your very modern looking newsletter, but

PETER MANDERS' GALLERY

Drawing by Peter Manders which appeared in the Hereford Times for Thursday, June 29, 1989.
The article which accompanied it is printed opposite.

feel free to use them if you want. Anyway, I thought a couple of the longstanding club members might be interested in seeing them again.

Hereford Times feature, Thursday, June 29, 1989.

LIKE most amateur radio enthusiasts, Stuart Jesson has been switched on by his hobby since he was a schoolboy when he discoverd the fascination of the airwaves.

He recalls listening to a crystal set, while sitting at the top of a tree. "I had some idea that the higher up the set the better the signal would be! I hadn't realised it was the aerial which should be higher," he laughs.

Stuart and his 50 fellow members of Hereford Amateur Radio Society all share the same interest in the world of communication — scientific, technical and experimental.

Most of the members have transmitting licences to talk to other enthusiasts — from as close as across the city, to as far as other enthusiasts worldwide.

Some visit radio hams they have"met" over the airwaves. Stuart has been to America and Bermuda.

Radio amateurs have to obtain a transmitting licence, and take examinations, both written and theory — and a full Morse Code test. "Morse is widely used — mainly by military type of establishments and the like.

Amateur radio is more geared to computers and satellites — it has become much more technical now — but amateur radio can be as simple or as high-tech as the enthusiast wants," he explained.

The only similarity radio amateurs have with Citizens' Band afficionados is the talking on a one-to-one basis. Otherwise it is entirely different.

Radio amateurs often build their own equipment; and whereas CB operators have "handles" the hams are allocated proper international call signs — Stuart's is "G4CNY". "Anyone in the world hearing that sign would know that it came from England. Our aircraft also use the "G" call sign. If a call sign began "JA" I would know that it came from Japan."

The Hereford Amateur Radio Society meet twice a month — once formally, with a speaker and once where members can get together and relate their activities.

Members also visit other clubs and radio stations and hold social events. Neither is it a male-dominated pastime. Hereford has three licensed women operators.

But what about amateur radio "widows" — as in "golf widows"? "It can be time-consuming, but there are pluses. Some partners are quite happy to have their better-halfs safely installed in a little room with their radio equipment," said Stuart.

Radio amateurs nationwide are anxious to attract more and younger members to their societies. The electronics industry is losing young people — possibly due to the rapid advent of computers — and the whole idea of communications has lost some of its appeal.

So, anyone wanting to become involved in the intriguing world of ariwaves, should contact HARS secretary Eddie Cox, 35 Thompson Place, Whitecross, on Hereford 354064.

I saw the list of HARS nets on the website. Are any of the hf nets active? I tuned in to 3.770 on 80m today but a different net started at 10.30am on that frequency, and I couldn't hear HARS anywhere.

73s
Paul Griffin – G0DJF

Great to see you at the last Club meeting, Paul ...Ed

FRANK HOOSEN TROPHY.

1966	G3ID/P	Exeter Group.
1967	G3VCC/P,G3KNB/P	Cannock Chase A. R.S.
1968	G3OHM/P	S.Birmingham R.S.
1969	GW3LEW/P,GW3SSK	Maesteg Contest Group.
1970		Port Talbot RSGB Group..
1971		Port Talbot RSGB Group.
1972		Oxford and District A.R.C.
1973	GM3YOR/P	Glenrothes and District A.R.C.
1974	GM3GAY/P	Gay Gordens Group.
1975	G4DAA/P	Channel Contest Group.
1976	G3GQC/P	Mansfield A.R.S.
1977	G3ZME/P	Telford and District A.R.C.
1978	G8AX/P	Telford and District A.R.C.
1979	GW5ZL/P	Swansea A.R.S.
1980	G3SFG/P	Southgate R.C.
1981	G3SFG/P	Southgate R.C.
1982	G3WKX/P	Maidenhead and District A.R.C.
1983	G3YDD/P	Hereford A.R.S.
1984	G3YDD/P	Hereford A.R.S.
1985	GU3HFN/P	Guernsey A.R.S.
1986	GU3HFN/P	Guernsey A.R.S.
1987	GM4GRC/P	Glenrothes & District A.R.C.
1988	GM4AGG/P	West of Scotland A.R.S.
1989	G3YDD/P	Hereford A.R.S.

Don't forget to send in your best DX successes!

editor@harsjournal.com

New Foundation licences to be issued with M7 calls

It appears that the M6 series of callsigns is nearly exhausted, and Ofcom is soon to start issuing M7 callsigns to new Foundation licencees.

Weekend Exams and visit of RSGB President!

Another successful IL course done and dusted and 9 very happy faces in Geoff's photographs. Congratulations to all the candidates.

L - R: Peter Lawley M6YPL, Joe Thomas M6XJT, Alex Wilson M6???, Richard Fox M6PQG, Alec Tandler M6KYT, Roger Brown M6RYR, ***Dave Wilson (Pres RSGB M0OBW)****, Paul Klasmann M6PYK, LeonJones MW6PQJ Kneeling front Ari Owen M6OYL*

On 24 November 2018, Paul Klasmann passed the Advanced and lost only four marks out of the total.

The following day, RSGB President and Exam Quality Manager, Dave Wilson M0OBW racked up unannounced at 1445 as we were setting up for the exam. There had been some problems with Test Reach this week so he thought a good idea to pop down and see our operation.

This was excellent as we, well Duncan Phil and Dave IDF were able to pass the responsibility for the operation to him!

This was also good as one one machine did fail so a swap had to be made mid-exam.

Pleased to report that all nine candidates including Joe at age 11 have passed so a good Christmas present of a new callsign.

Geoff has a taken photographs of the Sunday event with Dave, M0OBW and the Training Team and with the successful candidates.

As Training Co-ordinator I am very pleased with the results and as usual thanks for your all your help!

73
Dave

Thanks, David ...Ed

The Trainers *L - R: Dave Hobro G4IDF, Phil Sandell G4HQB,* ***President RSGB Dave Wilson M0OBW****, Rod Archard M0JLA, Dave Porter G4OYX, Duncan James M0OTG, Adrian Hartland G8IVO*

Pat MacAlister's station G3YFK

The HARS Technical Library

This is the new lending library thanks to Bob G3IXZ, who is the "owner". The library is of course at Hill House - thanks to Geoff G8BPN. Great stuff here…, do take a look.

Subjects covered include: Antennas, Technical, Reference, Historical, Equipment and QRP.

European Conference on Amateur Radio Astronomy (EuCARA 2018)

by Norman M0SXF

EuCARA 2018, some of the delegates

The third biennial European Conference on Amateur Radio Astronomy was hosted by Astropeiler Stockert, in Bad Munstereifel, Germany over the weekend of 15-16 September 2018.

The conference attracted 59 delegates from eight countries including 4 from the UK. Eleven presentations were given by attendees in the morning and early afternoon and a keynote speech was delivered at the start of the Sunday session. As a conference, interest in the event has grown substantially, from 16 to 59. The venue also serves the Amateur Radio community, with equipment ranging from137 kHz through to 241 Ghz, including EME.

The presentations embraced the topics of: Meteor Detection; Meteor Scatter; Digital Sky Mapping; Pulsar detection; Remote station control; Schumann resonance; and Hydrogen line observations, embracing a very wide range of the radio frequency spectrum.

On Saturday afternoon, a private visit to the 100m Effelsberg radio telescope had been organized, with a tour of the facility given by its Director. This included a walk across the 'dish' motor drive platform. Elevators removed the effort of ascending 20m+ to the motor elevation platform instead of using stairways.

Following this visit the Conference Dinner was held in the town of Bad Munstereifel. Whilst this was essentially a cultural activity giving an opportunity to enjoy local cuisine, it also facilitated the exchange of views, opinions and advice in the context of Radio Astronomy between attendees.

On Sunday morning our keynote presentation was delivered by Prof. Michael Kramer, Director of the Max-Planck Institute for Radio Astronomy. His presentation took us away from the electro-magnetic frequency spectrum to the realm of Gravitational Waves. Gravity is the weakest of the four natural forces by several magnitudes. It is always additive unlike the electromagnetic force which is polarised. Gravity is a property of 'mass', the more mass there is the more gravitational attraction there is. This attraction between any two bodies of mass is always there, just the scale of attraction increases as the amount of mass increases. For example, the Moon orbiting Earth attracting the oceans (tides). Also, to the extent that enormous stellar bodies known as 'Black holes' can exert their attractive force over incredible stellar distances on Sun sized objects. Hence whilst this weakest force of nature by its additive effect makes it the strongest of all. Thus this supreme force is 'King' of the realm. Note, a Black hole can have the mass of more than a million Suns, as does the Black hole at the centre of the 'Milky Way' galaxy holding it together as it rotates. The startling announcement of Prof. Kramer's talk was the use of two pairs of Black holes for the detection of 'Gravity waves.

The Sunday afternoon period was given over to various demonstrations presented by the Astropeiler team with their telescopes. A special display was devoted to the various options to observe the spectrum of neutral Hydrogen in our galaxy at a wavelength of 21 cm. I am sure there are a lot of amateur

Continued opposite…

radio enthusiasts out there with perhaps only a casual interest in amateur radio astronomy who would like to know more.

The organising committee and Support team from Astropileir Stockert did a fantastic job with a well organised conference and are to be congratulated.

The next conference in 2020 will probably be held in Holland at Dwingaloo.

Personal note

My return journey home should have been completed in a leisurely 8 hours, 'letting the train take the strain'. However, the cumulative effect of three unconnected travel events extended this to a now tiring journey of 16 hours, arriving home Tuesday at 02:00.

Norman

Thanks, Norman ...Ed

Dan's USA Column

Big changes ahead for ARRL board

By Dan Romanchik, KB6NU

The results are finally in. No, I'm not talking about the national mid-term election results. As I'm writing this, some of those votes are still being counted. I'm talking about this year's ARRL board elections. ARRL members have spoken, and they have elected four new faces to the board in what was the most hotly-contested election in a long time.

Three of the five incumbents, plus an incumbent vice director running for the Northwest Division director position, were defeated by candidates calling for more transparency and for changes in the way that the ARRL operates.

Here are the results:

Central Division Director

- Kermit Carlson, W9XA 1,898
- Valerie Hotzfeld, NV9L 1,755

Hudson Division Director

- Ria Jairam, N2RJ 1,292
- Mike Lisenco, N2YBB 1,239

New England Division Director

- Fred Hopengarten, K1VR 1,432
- Tom Frenaye, K1KI 1,383

Northwestern Division Director

- Mike Ritz, W7VO 1,589
- Bonnie Altus, AB7ZQ 1,308
- Horace Hamby, N7DRW 495

Roanoke Division Director

- George Hippisley, W2RU 1,891
- Dr. James Boehner, N2ZZ 1,365

In the only two contested vice director elections, Mark Tharp, KB7HDX defeated Daniel Stevens, KL7WM and Delvin Bunton, NS7U in the Northwest Division and in the Roanoke Division, William Morine, N2COP defeated John Humphry, W4IM. All newly elected officials will take office at noon on January 1, 2019.

I was kind of surprised here that Valerie Hotzfeld, NV9L, failed to win in the Central Division. She has certainly made many contributions to amateur radio, both in the DX/contest community and on Ham Nation. Apparently, though, she made some statements that she was forced to retract, and that probably hurt her campaign, and as some pointed out to me, Kermit Carlson, W9XA, was well thought of in the Central Division and in the VHF/UHF community.

Overall, though, I'm very pleased with the results. Although some of the margins of victory were small—K1VR won by only 49 votes and N2RJ won by 53 votes—I think it's pretty clear that the members want change. Now, it's up to the board, including its newest members to effect that change. As always, I'm ready to help in any way that I can.

Thanks Dan ...Ed

When he's not keeping up with ARRL politics, Dan blogs about amateur radio, writes exam study guides (www.kb6nu.com/study-guides), and operates CW on the HF bands, and lately some digital modes as well. Look for him on 30m, 40m, and 80m. Please email him your thoughts about the ARRL at cwgeek@kb6nu.com.

Nixie Clock

by Paul Klasmann

The clock in action!

The upper photo shows the display in a darkened room. The effect can be enhanced by placing a suitably-coloured filter in front of the display.

This Nixie clock was based on the ArduiNIX open source project where a Nixie clock was made on a "shield" that plugs onto an Arduino. I decided to make my own PCB that contained all of the clock components and controlled by an Arduino Nano that was soldered onto the PCB. A separate PCB was made for the particular Nixie tubes that I had bought on eBay. These are the IN-17 tubes from Russia. These Nixie tubes were often used as numerical displays in electronic test equipment in the 60s and 70s before 7 segment LED displays became popular. The glass tube contains neon gas that glows around a conductor when there is a high potential between the anode and cathode. Depending on which cathode is connected to ground, one of the digits will glow.

The double sided PCBs were designed with the free version of EagleCAD. Nixie tubes require around 170V to work and this is provided by the open source high voltage switch mode supply that I found at www.desmith.net/NmdS/Electronics/NixiePSU.html. The Eagle files are freely available and I had a few PCBs made to build the power supply to power the Nixie tubes.

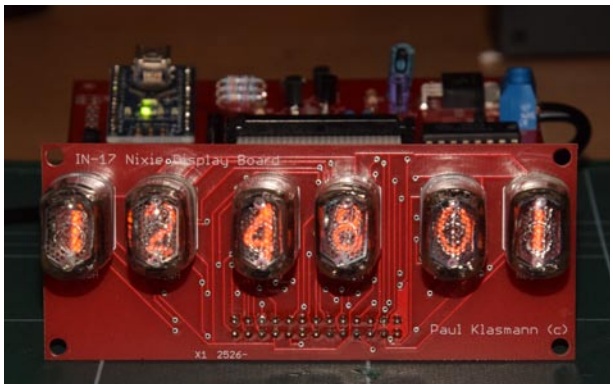

Due to the high voltages required, the Arduino IO lines controlled special binary to decimal converters capable of working at rather high voltages. Only two of these 74141N ICs were required because the six display tubes are multiplexed. These ICs were also sourced from Russia via eBay.

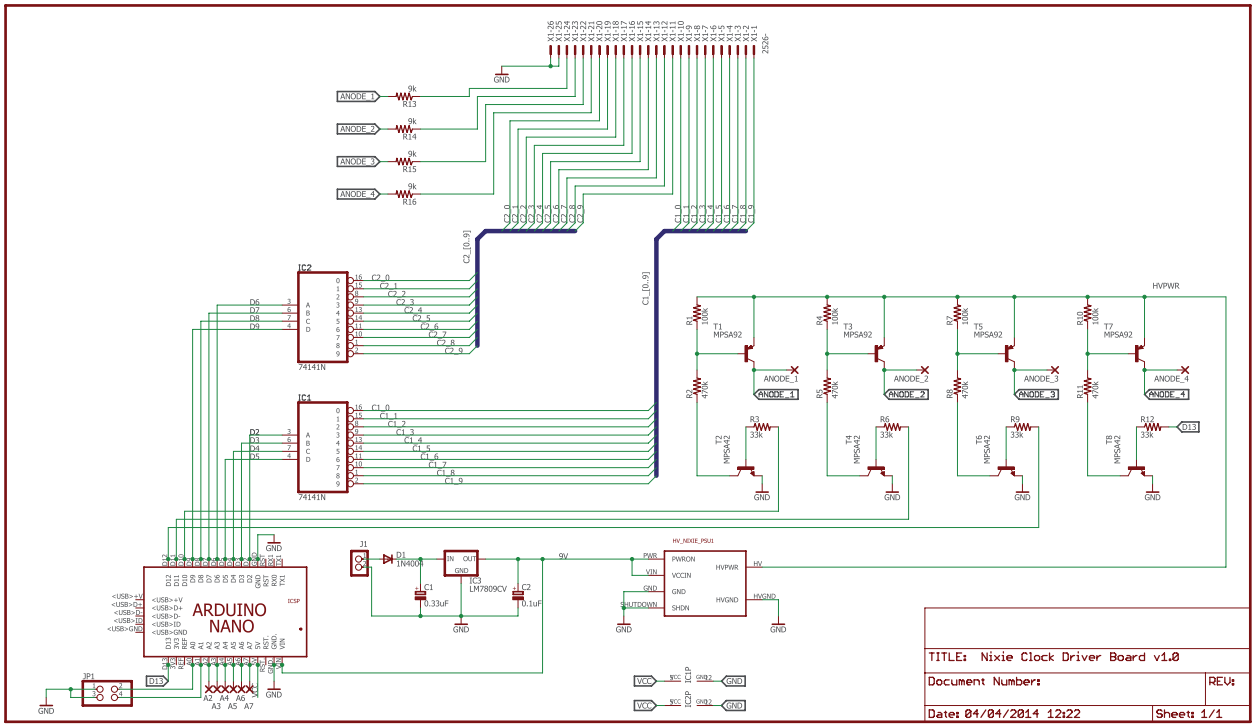

Circuit diagram of the control board, which connects to the Arduino Nano.

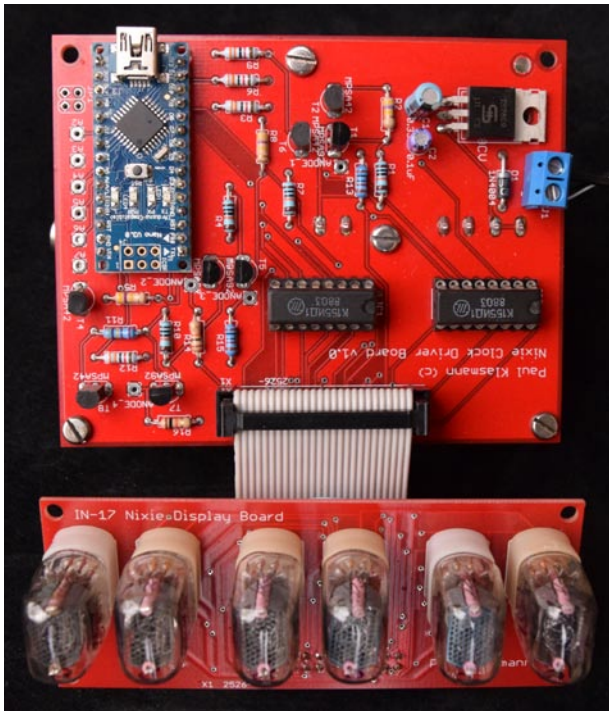

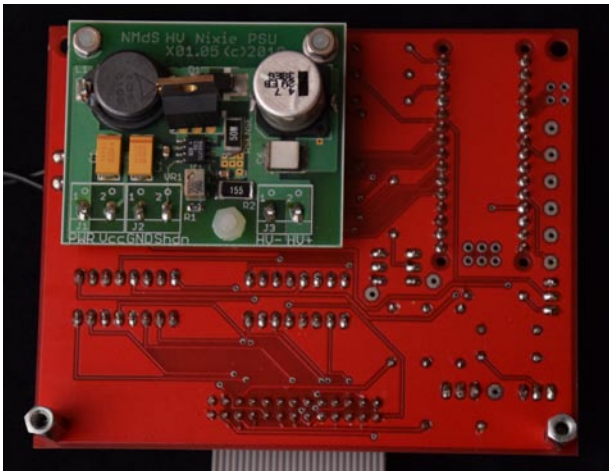

Left: shows the top of the control board with its ribbon-cable connection to the display board.

Above: the underside of the control board shwing the high-voltage generator module.

The high voltage is applied to the anode of each Nixie tube via a MPSA42 NPN transistor and each of these can be turned on or off to switch the display under microcontroller control.

The original software was modified to work with my design and features as a way to provide a smooth transition between digit changes. Since the control and display are separate PCBs, different PCBs can be designed to accept other tube styles or sizes. The two PCBs are conveniently connected with a single ribbon cable.

The whole circuit operates from 9V with the 5V to the Arduino Nano provided by a LDO voltage regulator.

The ArduiNIX website can be found here: www.arduinix.com

Paul Klasmann

Thanks, Paul ... Ed

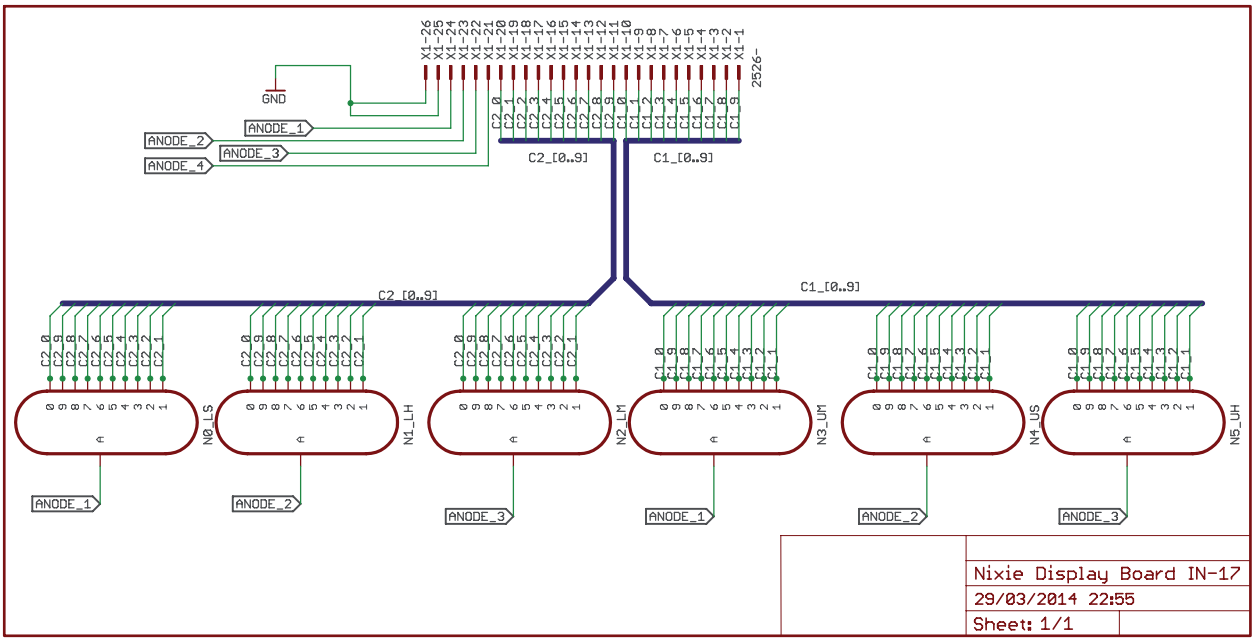

Circuit diagram of the display board, upon which the Nixie tubes are mounted.

Digital amateur TV over an optical link

by G4HJW

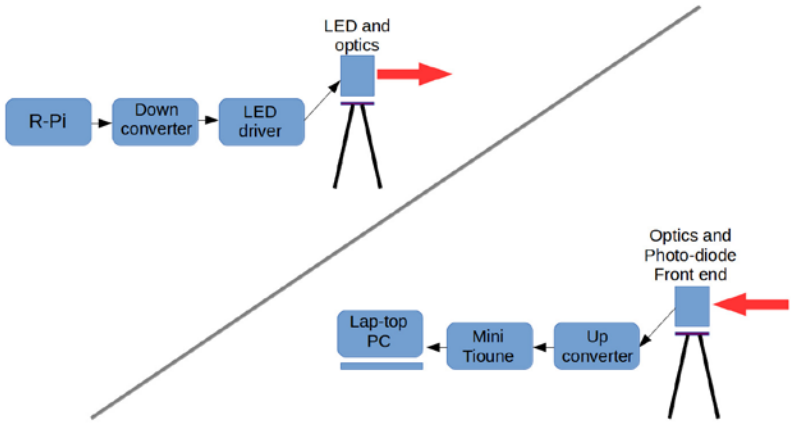

In the previous edition of the HARS Journal, Ray G0IMV wrote about digital amateur television using the BATC's Raspberry Pi transmitter software and their MiniTioune receiver. Having already described putting audio over a red LED beam in an earlier edition, it seemed only natural to tie the two areas together and try sending a datv signal over an optical link. The results have been quite encouraging.

Some background:

A couple of years ago, Rob M0DTS sent an analogue TV signal 11km over a red optical link. For this, he used a conventional PAL video signal on top of a 20 MHz sub-carrier – quite an achievement, considering the frequency involved. This may seem a strange statement given that fibre optic links operate over a very much higher bandwidth, so an explanation is probably in order, especially as the reason is not that obvious. Fibre optic links are all about getting as high a data rate through-put as possible, of course, and photo-diode detectors can attain sensible speeds, but only by ensuring that their self capacitance does not load the output at higher frequencies. In practice, this is achieved by terminating them into a near zero-ohm load, usually the -ve input of a low noise high frequency op-amp (usually referred to as a transconductance amplifier). The price that is paid for doing this is to have a much lower sensitivity than when operating the photo-diode into a very high input impedance buffer, as we do in audio optical link work. However, low receive sensitivity is not really a major problem in fibre link situations.

Digital TV bandwidth is dictated by the Symbol Rate employed. In the case of domestic satellite transmissions, a typical Astra DVB-S figure would be 27500 ks/s. Tests show that where there is little or no picture movement, the Symbol Rate can be reduced down to about 150 ks/s and still produce an acceptable picture quality. In view of this, all my first-off testing was done using DVB-S modulation at a Symbol Rate of 150 ks/s.

In practice

The Raspberry-Pi, in normal mode, produces base-band I/Q signals for mixing/conversion to the final frequency. However, there is a Test mode that can produce a signal at any frequency between 1 and 450 MHz, though it does need band pass filtering to remove the near infinite number of cyclic spurious components. Since I had a suitably wide 17.5 MHz crystal filter, this was chosen as the R-Pi output frequency. Following filtering, this was down converted to baseband resulting in the spectrum shown in Figure 2. Note that the full width of this DVB-S signal is twice the Symbol Rate.

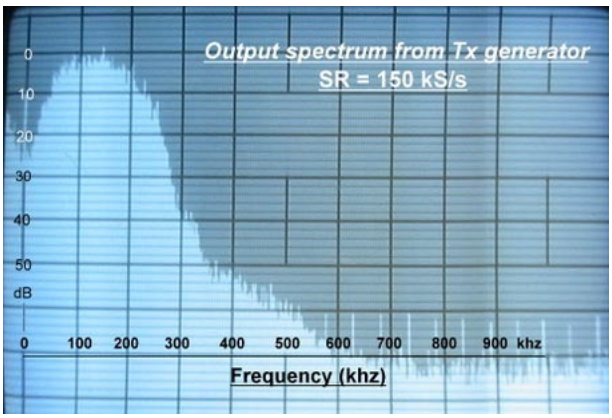

Figure 2

A 1.5W red LED was used for the output device and this was driven from a conventional TDA7297 audio power amplifier IC pcb assembly available on ebay. Surprisingly, there was only a 3 dB droop at the hf end, so it was easy enough to add a simple RC network on the input to correct for this. I wanted to run everything in Class 'A' at this stage, so the output was dc coupled and fed against ground

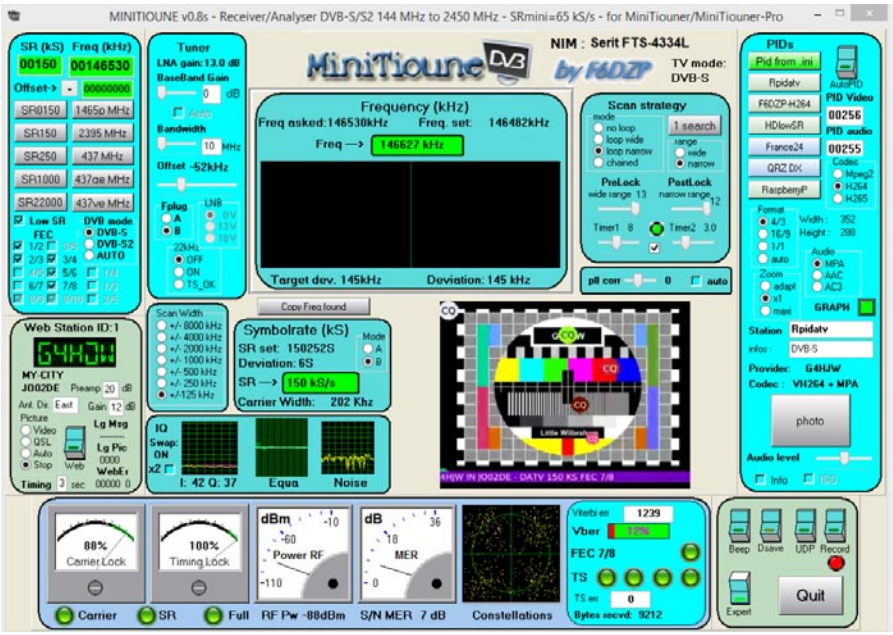

work showed that the Minitioune receiver was quite capable of decoding a double sideband signal anyway, so much simpler hardware would have been possible.

Results

Tests over a short 30m path using a LED running only 0.75 mA and with no Fresnel lens (ie, 60 dB down) were successful (figure 3), indicating that a range of at least 30 km is possible using the 1.5W LED at full power.

(using a series resistor to define the quiescent current).

The LED has a half power beam-width of 120 degrees and this needs to be reduced as far as possible to increase the link range. Low cost A4 size Fresnel lenses are readily available as 'page magnifiers', reducing the beam-width to sub 1 degree. These lenses usually have a focal length of about 300mm. A little bit of trigonometry shows that this equates to an illumination angle of some 35 degrees, so a second collimating lens is required in front of the LED to reduce its 120 degree beam down to 35 degrees.

On receive, a standard Osram 5mm opto-diode was used. The one chosen had a half power beamwidth of 30 degrees, matching the Fresnel lens fairly well, so no collimating lens was used at this end of the link. Front end circuitry was the same as for audio use, but with two exceptions. Firstly, frequency compensation was added to counter the reduced frequency response above 1 khz, and secondly, video type op-amps were used to cope with the 300 khz upper frequency and also to provide a conveniently high output drive current, useful for driving 50 ohm circuitry directly. The base-band output then needed converting up to 146.5 MHz so that the Minitioune receiver could be used. A second 17.5 MHz wideband crystal filter was available, so the conversion was done in two steps (by using the filter to generate a usb signal, the two step conversion simply translates the base-band signal to an identical one at final frequency). Later

Ex projector red LEDs (25W) are available on ebay, increasing the potential range to over 100 km on a clear night. At these distances, there can be quite a lot of light scintillation due to air currents. The resulting very slight dynamic deviation in path length causes multipath propagation and resulting QSB, hence the scintillation. It remains to be seen what effect this will have on the Minitioune's ability to correctly decode the signal, though there is error-correction coding built into the DVS-B signal.

Tx: 1 – R-Pi and up-converter
2 – Tx LED driver amplifier
3 – Tx LED
4 - Light box

Rx: 5 – Photo-diode head
6 – Up-converter
7 – Minitioune receiver
8 – Lap-top PC

Figure 3.

So, all very interesting!. There will be more detail appearing in the next edition of the BATC's quarterly magazine, and in due course on my own website, but I am quite happy to provide more information to anyone who cares to email me (address as per qrz.com)

Bernie G4HJW

Thanks, Bernie ...Ed

JOTA/JOTI October 2018

3rd weekend of October saw HARS members taking part in this annual event, this year was the 61st time the event has run, HARS members were active in two places, Ludlow and Hereford, This is a report from the Hereford contingent to the Jamboree,

South Marches Scouts (used to be known as Hereford District Scouts) asked if HARS could help out at this event earlier in the year, all was quiet until about 6 weeks before the event. Clive G8LNR (also a scouter in South Marches) took up the challenge and started putting the pieces together, sorting/arranging equipment and requesting assistance from members,

The location for Hereford was The Bishops School in Tupsley, we were told that we had access from the Friday evening, and that radio operations would be done during Saturday and into Saturday evening plus Sunday morning if time permitted and that we'd have to be clear of the school by 11am on the Sunday

6 pm Friday saw the arrival on site of Tris, Clive, Adrian, Andy and Elwyn, within about 2 hours the tower was up, HF antenna spread out and coaxes run into the school and the rigs attached and run up. 1 quick contact was made with a Spanish JOTA station in Ceuta (NW Spain)

Mast in the Car Park

Saturday Morning saw the arrival of 125 cubs from South Marches District and for the next 5 hours we had 12 different cubs every ½ to ¾ hr. Right thru till 3pm when they went home,

Time for Tea.....

After tea 85 Scouts arrived and once again we had 12 scouts every ½- ¾ hr till 8 pm

Looking at the radio log, here are a few statistics,

- 52 contacts or qso's
- 100 Cubs and scouts spoke or passed messages over the airwaves
- 22 of those contacts were with jota stations
- 12 different countries were worked.

South Marches Scouts and HARS would like to send a huge thank you to Patric - F0DBU - in Normandy, who spent over an hour on the VHF radio talking to Cubs and Scouts.

HF Station

VHF Station

Equipment

HF Station

- TS2000x
- Daiwa ATU
- G5RV (full size) at 15m running in a North /South Direction

VHF Station

- TS2000x
- Dressler Linear (350w)
- 17 Ele Tonna at 15m and 4 ele Vertical

In addition to the radio side, A datong Morse tutor was set up with a Morse key, crib sheets and paper and the cubs and scouts were encourage to try their had at sending and receiving a message in Morse

Thanks go to the following members for all their help and support over the weekend, and they are in no particular order

- Adrian G8IVO, arranging the call sign (GB4SMS), 1000's other tiny items that I forgot and operating the HF station
- Tris M0VXX, for the loan and setup of the whole of the VHF station, tower and VHF antennas
- Andy G4XRS for his assistance on many levels including operating

Morse table

- Logan K9DOG for providing a talking point for the some of the young people.
- Elwyn M1EIR for his assistance in setting up and hopefully we re awakened his interest in amateur radio
- Rod M0JLA and his wife Vicki M6BWA for all the operating on VHF and patience with the Morse messages. Exceptional help given - thanks. So much appreciated.

HARS will be asked for their assistance at next year's event, let's see if we can put on a bigger and even better station, we must remember that the seeds sown with these cubs and scouts are going to lead to the radio amateurs of tomorrow.

Clive Taylor-Edwards G8LNR
South Marches Active support Unit

Thanks, Clive ...Ed

DX - Amazing!

Notes from G1YBB

Recently there was some excellent tropo from Cape Verde to the UK on 144MHz. I was on facebook at the time and in a group chat it was mentioned. I then passed that info onto the HARS facebook chat we have.

I said they (the station in Cape Verde) had moved to a digi mode FT8. Craig M0BUL was online, saw my message and went to the frequency I had spotted and worked them!

That's over 4400km on 144MHz.

They have since had their record breaking QSOs confirmed, and Craig currently co-holds the FT8 144MHz tropo Region 1 record. See pic attached.

Craig was using just a little 5 element beam and 100W.

Thanks, Steve ...Ed

Band	Propagation	Call a	Loc	Call b	Loc	Mode	Date	Distance
144 MHz	**TR**	D4Z	HK76MU	G3SMT	IO82KV	CW	2018-09-25	4430
144 MHz	**TR**	D4CV	HK76MU	M0BUL	IO82NG	FT8	2018-09-25	4303
144 MHz	**TR**	D4Z	HK76MU	GW0KZG	IO81FQ	CW	2018-09-25	4303
144 MHz	**TR**	D4CV	HK76MU	G4RRA	IO80BS	FT8	2018-09-25	4205
144 MHz	**TR**	D4Z	HK76MU	EI3KD	IO51VW	CW	2018-08-05	4163

Distance record on 144 MHz Propagation : TR

All back-issues of the *journal* can be downloaded from the HARS website herefordradioclub.uk

HARS radio equipment available for loan to Club members or for purchase

The following list of equipment is available for loan to Club members. The loan period is 3 months and members wishing to use the equipment will have to sign a simple agreement which covers the loan terms. If you wish to borrow then please contact Duncan (Hon Sec) M0OTG.

- Grid Dip Meter MFJ-201
- Buddipole 10-40M portable antenna with tripod and carrying case.
- Yaesu FT450 All bands to 50MHz. Needs a 12V PSU
- Pixie 7MHz QRP kit. Needs assembling.
- Baofeng UV-5R 70cms/144MHz hand-held complete with accessories.

Go portable with the Buddipole! Ed.

Do check out the MOJCQ Blog

www.hamblog.co.uk/top-10-amateur-radio-uses-for-raspberry-pi/

Suggested uses for the Raspberry Pi!

Sid & Charlie

Employment opportunities at ETL Systems

ETL Systems are based at Madley where they design and manufacture RF distribution equipment. The Company have several positions available for software/firmware engineers. Also, positions available for production technologists and pcb design personnel. Apprenticeships too!

If you would like to consider joining this worthwhile Company please contact them direct on 01981 259020 or if you wish to discuss with me (Mike) first of all, then please email editor@harsjournal.com or call 01432 272987.

Club Personalised Merchandise

All items have your callsign and club details. For availability and prices please contact Peter Lawley M6YPL or editor@harsjournal.com

T Shirt

Cap

Mug

An exotic China version is available.

Articles Wanted!

Please think about submissions/projects you might like to send in or see.

General topics and key words are listed below.

Members projects	Events	Training
Members station	Notices	QRP/QRO
Construction	Help	Illustrations
Items wanted	News	Photographs
Items for sale	DX	Early radio
Hints and kinks	Militaria	Restoration...

... or anything else that you think might be of interest to HARS members. If you have an idea for a submission, but don't know how to present it, I will do it for you.

Please submit anything and everything to editor@harsjournal.com or talk with Mike at the Club meetings.

73s es GDX, G3LZM
Mike Bush (Editor)